VACUUBRAND®

Chemistry vacuum system MD 4C NT +AK+EK Peltronic



Link to the website

Product description

This chemistry vacuum system has a wide range of applications like evacuation, evaporation and pumping of gases and vapors in chemical, biological and pharmaceutical laboratories. This system is ideal for high vacuum requirements with high boiling solvents. Typical applications are rotary evaporators and drying ovens. The separator at the inlet (AK), made of glass with a protective coating, retains particles and liquid droplets. The waste vapor condenser at the outlet (EK) is highly efficient and compact. The condenser enables near-100-percent solvent recovery, efficient recycling of solvents and active protection of the environment without any need for external coolant.

Performance features

- outstanding chemical resistance and superior vapor tolerance
- exceptionally high performance even at low vacuum
- excellent ultimate vacuum even with gas ballast
- whisper quiet and very low vibration
- excellent environmental friendliness due to efficient solvent recovery without external coolant

Technical data are subject to change without notice
© VACUUBRAND GMBH + CO KG | 2026

Link to the website:
https://shop.vacuubrand.com/22613972

Ordering data

Product name	Nominal mains voltage | mains frequency	Plug type	Articleno.
MD 4C NT +AK+EK Peltronic	230 V | 50-60 Hz	IEC plug EN 60320	22613972

Items supplied

Pumping unit with included Peltronic emission condenser, with operating manual, without power cable.

Accessories

- Silencer with hose 5cm DN 8-10mm (20636588)
- Adjustable elbow DN 10/8 mm (20637873)
- Vacuum tubing transparent DN 8 mm (20686061)
- Set of diaphragms and valves MD 4C NT/VARIO / PC 3003 / PC 3004 (20696870)
- Silencer with hose 5cm DN 8-10mm (20636588)
- Adjustable elbow DN 10/8 mm (20637873)
- Vacuum tubing transparent DN 8 mm (20686061)
- Set of diaphragms and valves MD 4C NT/VARIO / PC 3003 / PC 3004 (20696870)
- Silencer with hose 5cm DN 8-10mm (20636588)
- Vacuum tubing transparent DN 8 mm (20686061)
- Set of diaphragms and valves MD 4C NT/VARIO / PC 3003 / PC 3004 (20696870)

Technical data are subject to change without notice
© VACUUBRAND GMBH + CO KG | 2026

Technical data

Max. pumping speed 50 Hz (m^3/h)	3.4 m^3/h
Max. pumping speed 60 Hz (cfm)	2.2 cfm
Ultimate vacuum	1.5 mbar / 1.1 torr
Ultimate vacumm with gas ballast	3 mbar / 2.2 torr
Number of heads	4
Number of stages	3
Permissible ambient temperature range (operation)	10 - 40 °C
Permissible ambient temperature range (storage)	-10 - 60 °C
Max. outlet pressure (abs.)	1.1 bar
Inlet connection	Hose nozzle DN 8-10 mm
Outlet connection	Hose nozzle DN 8-10 mm
Rated motor power	0.25 kW
Rated speed 50/60 Hz	1500/1800 min^{-1}
Protection class IEC 60529	IP 40
Dimensions (L x W x H)	360 mm x 326 mm x 392 mm
Weight	21.3 kg
Noise (sound pressure level) in dBA at 50 Hz or 1500 rpm/62% (VARIO)/1500 rpm (VARIO-SP)/12500 Upm (VACUU·PURE®)	45 dBA
ATEX conformity	II 3/- G Ex h IIC T3 Gc X Internal Atm. only
NRTL certification	No

Technical data are subject to change without notice
© VACUUBRAND GMBH + CO KG | 2026

Link to the website:
https://shop.vacuubrand.com/22613972

Pumping speed graph at 50 Hz

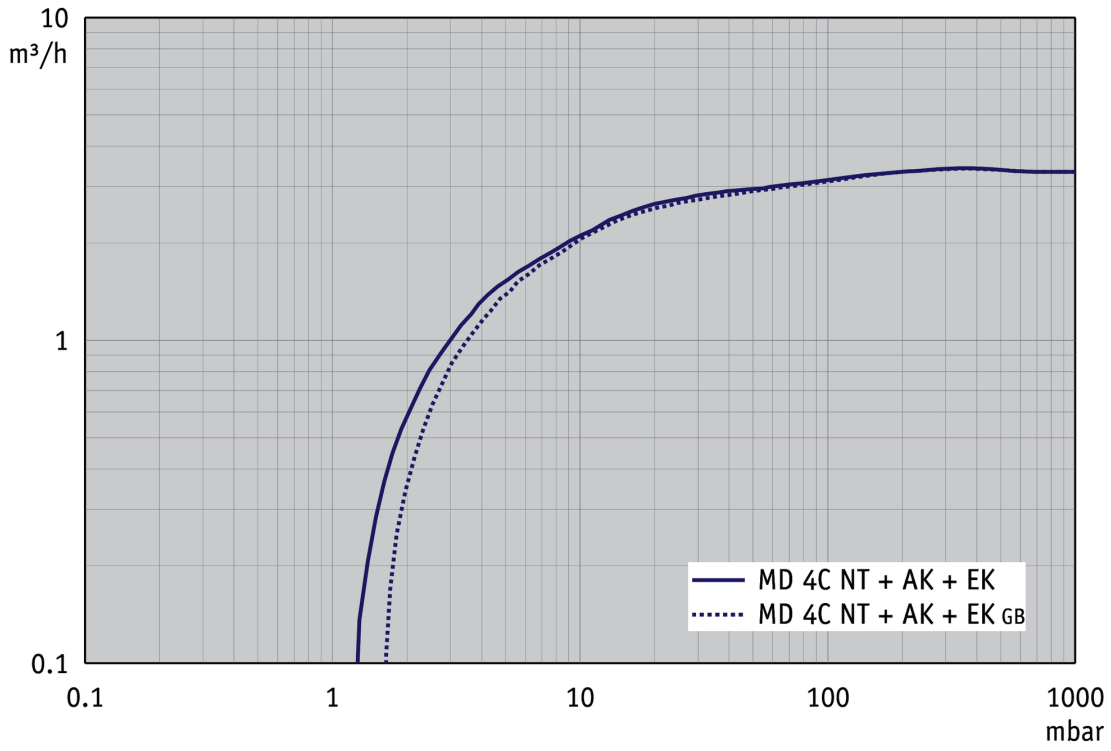

Pump down graph at 50 Hz (10 l volume)

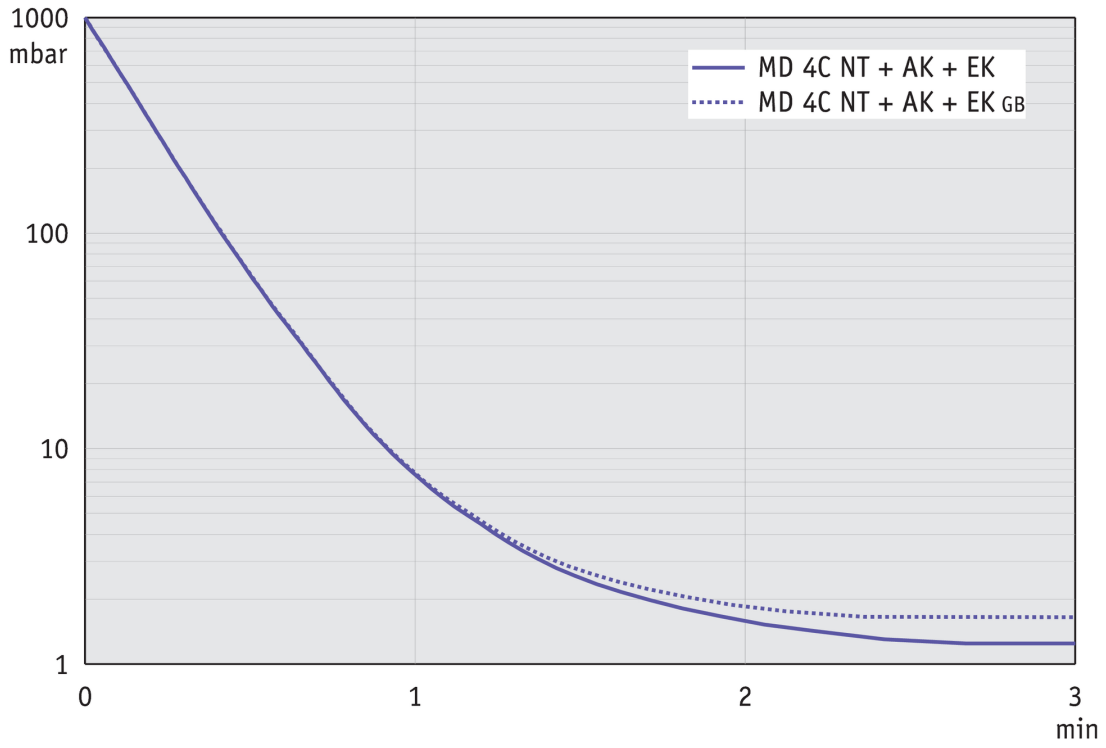

Technical data are subject to change without notice
© VACUUBRAND GMBH + CO KG | 2026

Pumping speed graph at 60 Hz

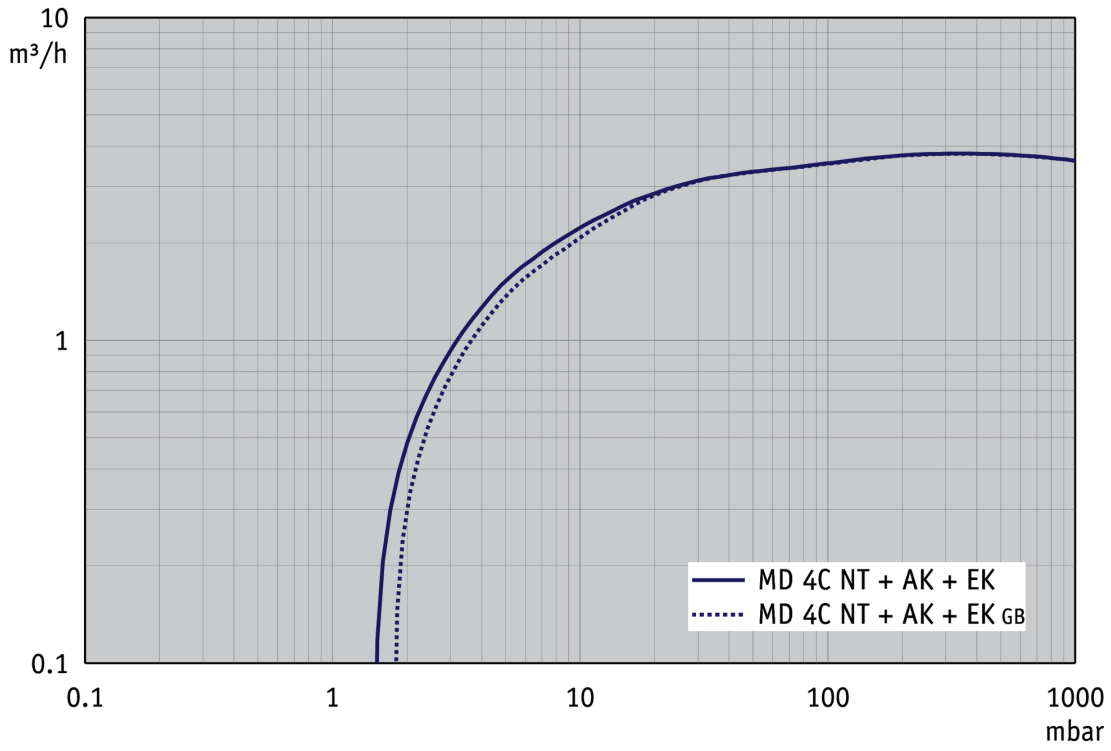

Pump down graph at 60 Hz (10 l volume)

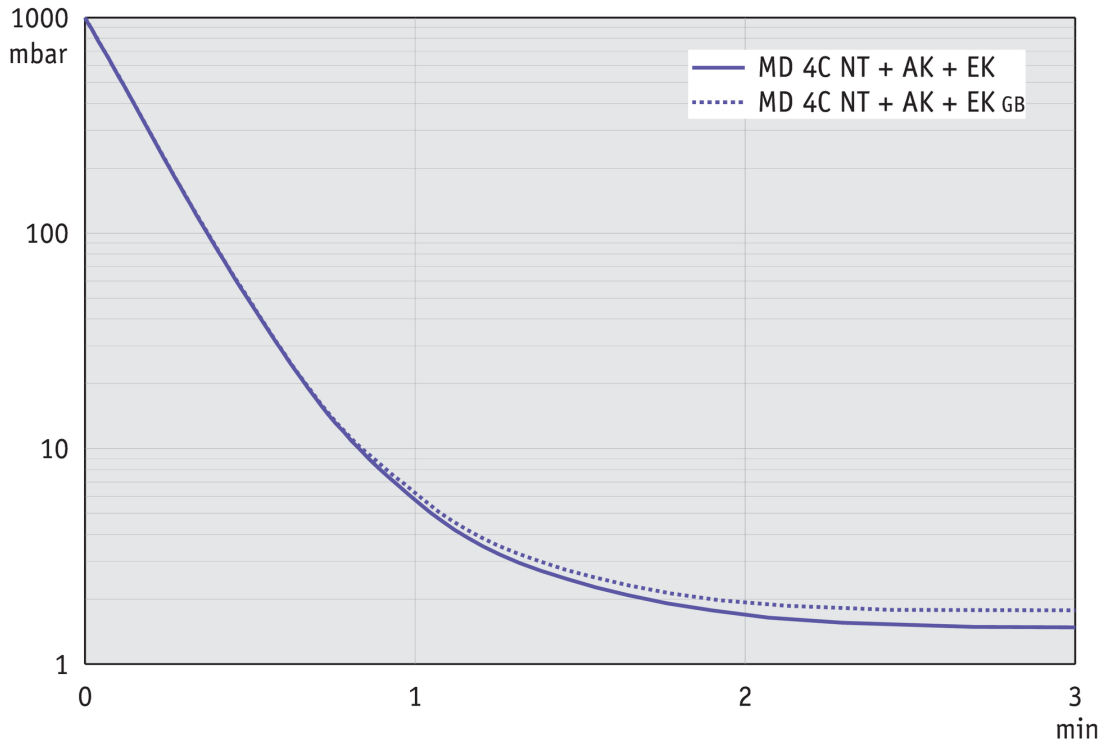

Technical data are subject to change without notice
© VACUUBRAND GMBH + CO KG | 2026

Link to the website:
https://shop.vacuubrand.com/22613972

Dimension sheet



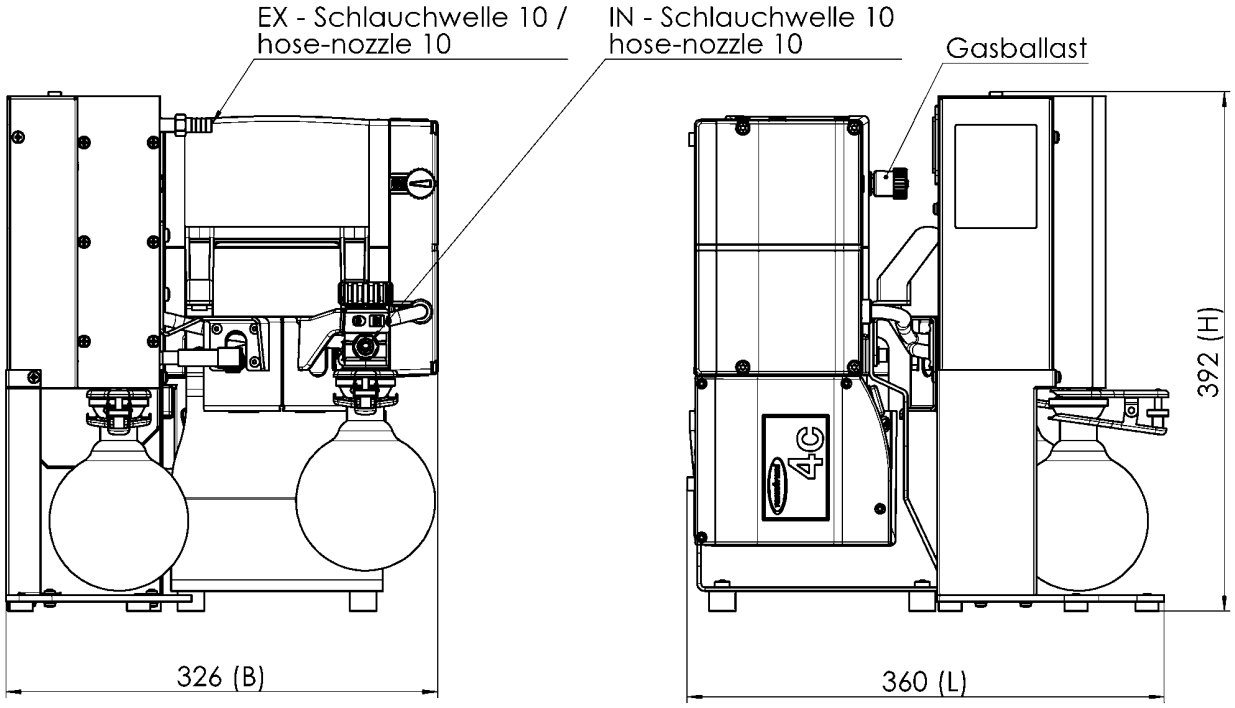

Alle Maße / all dimensions (mm)

VACUUBRAND MD 4C NT AK+EKP
Version 2011/02/03

Technical data are subject to change without notice
© VACUUBRAND GMBH + CO KG | 2026

Link to the website:
https://shop.vacuubrand.com/22613972

VACUUBRAND GMBH + CO KG
P.O. Box 1664
97877 Wertheim
T +49 9342 808 5550
F +49 9342 808 5555

info@vacuubrand.com
www.vacuubrand.com

VACUUBRAND

VACUUBRAND is part of the Brand group, a manufacturer of high-quality and innovative laboratory equipment and vacuum technology with a global team of approx. 1,000 employees.

With highly motivated and qualified employees, we manufacture the world's most comprehensive product family for vacuum generation, measurement and control for the rough and fine vacuum range in the laboratory.

All with one goal:
Enabling our customers to run reliable, safe and efficient processes. This is why we commit ourselves to continuous innovation, first-class performance, and outstanding quality.

Engineering excellence is central to our ability to deliver products and solutions renowned for their quality, durability, and reliability. Innovative technology, high quality materials and extensive testing deliver unmatched performance - engineered and manufactured in Germany.

Together with you, our experts will find the best solution for your application and provide you with first-class service along the way.

© VACUUBRAND GMBH + CO KG

BRAND (Shanghai) Trading Co., Ltd.
Shanghai, China

T +86 21 6422 2318
info@brand.com.cn
china.brand.com.cn

BRAND Scientific Equipment Pvt. Ltd.
Mumbai, India

T +91 22 42957790
customersupport@brand.co.in
www.brand.co.in

BRANDTECH® Scientific, Inc.
Essex, CT. United States of America

T +1 860 767 2562
info@brandtech.com
www.brandtech.com

BRANDGROUP®