VACUUBRAND®

Chemistry diaphragm pump, wide-range motor (switchable) ME 1C



Link to the website

Product description

Vacuum filtration is one of the most common applications used for sample preparation in chemistry, microbiology, waste water control and other analytical processes. The ME 1C diaphragm pump offers a compact, high performance and easy-to-use solution which is perfect for single filtrations. This development, based on the highly successful technology of the oil-free diaphragm pump MD 1C, provides a well-proven and extraordinarily long diaphragm life time. The functional, space saving and innovative design with easily accessible, top-mounted power switch ensures convenient and quick operation for day-to-day lab work. Robust PTFE diaphragms and valves provide optimal chemical resistance. A manual vacuum regulator valve with dial gauge for adjustment of pumping speed and ultimate vacuum is available as accessory.

Performance features

- convenient, quick and simple to use due to the new top-mounted power switch
- whisper quiet and very low vibration
- requires minimal benchtop space
- maintenance-free drive system and proven long diaphragm life
- high chemical resistance

Technical data are subject to change without notice
© VACUUBRAND GMBH + CO KG | 2026

Link to the website:
https://shop.vacuubrand.com/20721105

Ordering data

Product name	Nominal mains voltage | mains frequency	Plug type	Articleno.
ME 1C	220-230 V | 50-60 Hz 100-115 V | 50-60 Hz 120 V | 60 Hz	IEC plug EN 60320	20721105

Items supplied

Pump completely mounted, ready for use, with manual.

Accessories

- Set of diaphragm and valves ME 1, ME 1C, VP 100, VP 100C (20696874)
- Silencer with hose 5cm DN 8-10mm (20636588)
- Vacuum tubing transparent DN 8 mm (20686061)
- Chemistry vacuum regulator valve unit ME 1C (20696843)

Technical data are subject to change without notice
© VACUUBRAND GMBH + CO KG | 2026

Technical data

Max. pumping speed 50 Hz (m^3/h)	0.7 m^3/h
Max. pumping speed 60 Hz (cfm)	0.5 cfm
Ultimate vacuum	100 mbar / 75 torr
Number of heads	1
Number of stages	1
Permissible ambient temperature range (operation)	10 - 40 °C
Permissible ambient temperature range (storage)	-10 - 60 °C
Max. outlet pressure (abs.)	1.1 bar
Inlet connection	Hose nozzle DN 8-10 mm
Outlet connection	Hose nozzle DN 8-10 mm
Rated motor power	0.04 kW
Rated speed 50/60 Hz	1500/1800 min^{-1}
Protection class IEC 60529	IP 40
Dimensions (L x W x H)	270 mm x 121 mm x 154 mm
Weight	5.4 kg
Noise (sound pressure level) in dBA at 50 Hz or 1500 rpm/62% (VARIO)/1500 rpm (VARIO-SP)/12500 Upm (VACUU·PURE®)	49 dBA
ATEX conformity	II 3/- G Ex h IIC T3 Gc X Internal Atm. only
NRTL certification	Yes

Technical data are subject to change without notice
© VACUUBRAND GMBH + CO KG | 2026

Link to the website:
https://shop.vacuubrand.com/20721105

Pumping speed graph at 50 Hz

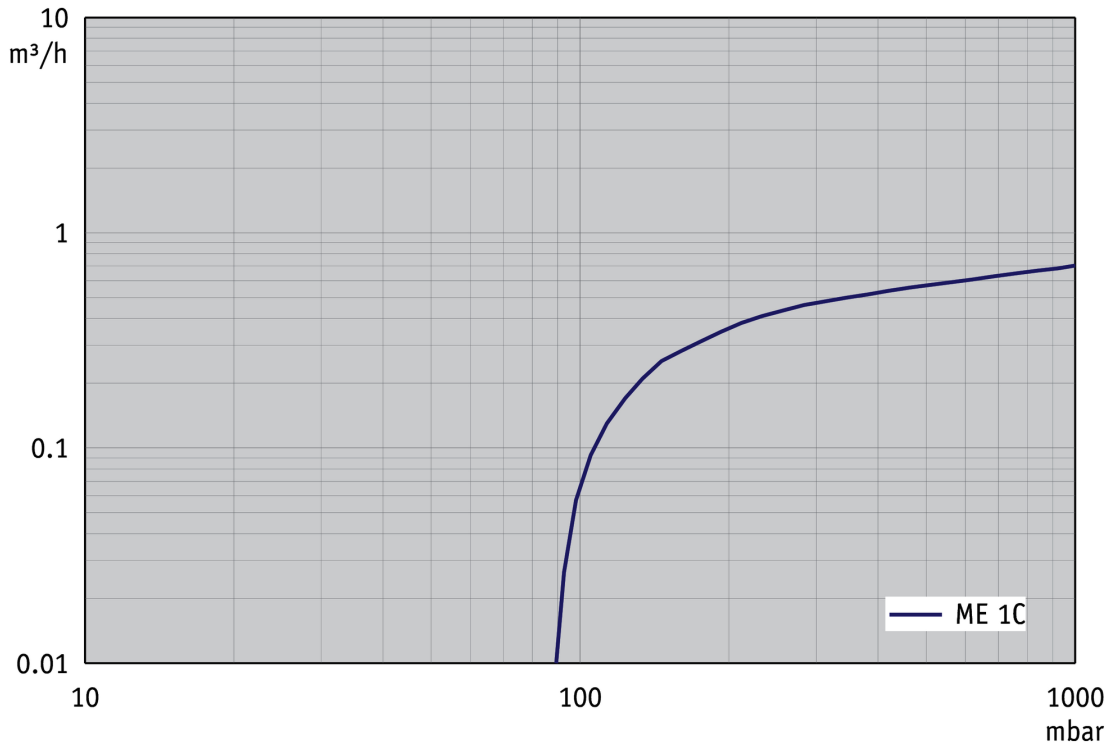

Pump down graph at 50 Hz (10 l volume)

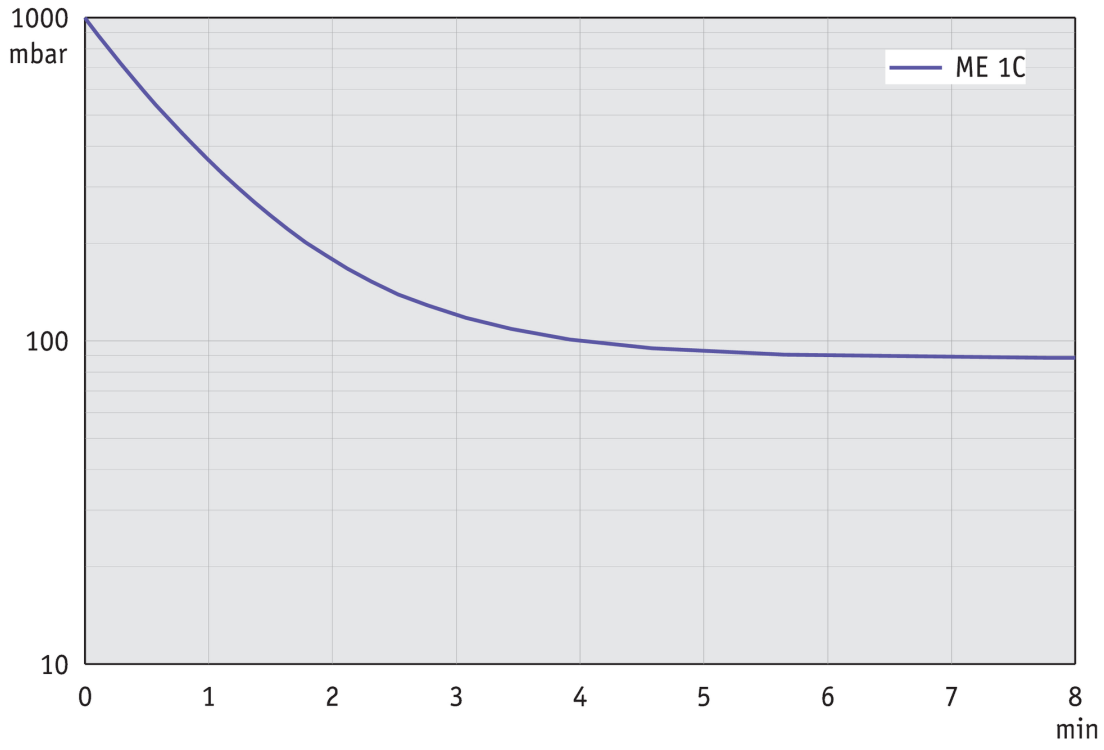

Technical data are subject to change without notice
© VACUUBRAND GMBH + CO KG | 2026

Link to the website:
https://shop.vacuubrand.com/20721105

Pumping speed graph at 60 Hz

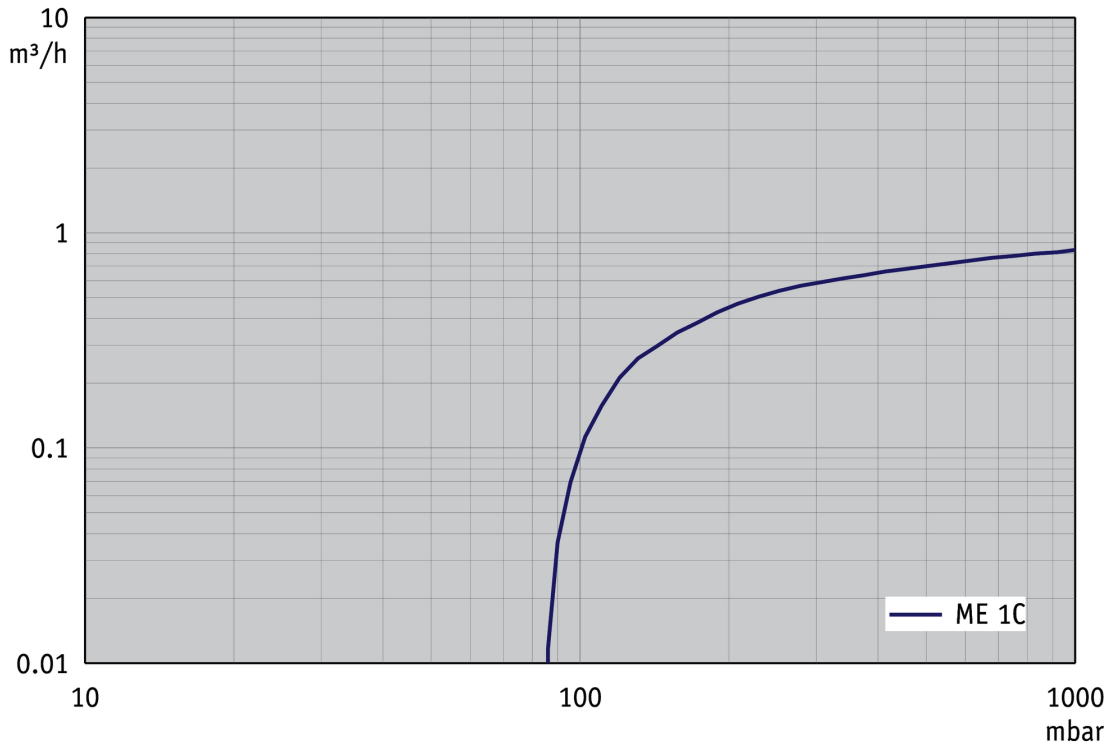

Pump down graph at 60 Hz (10 l volume)

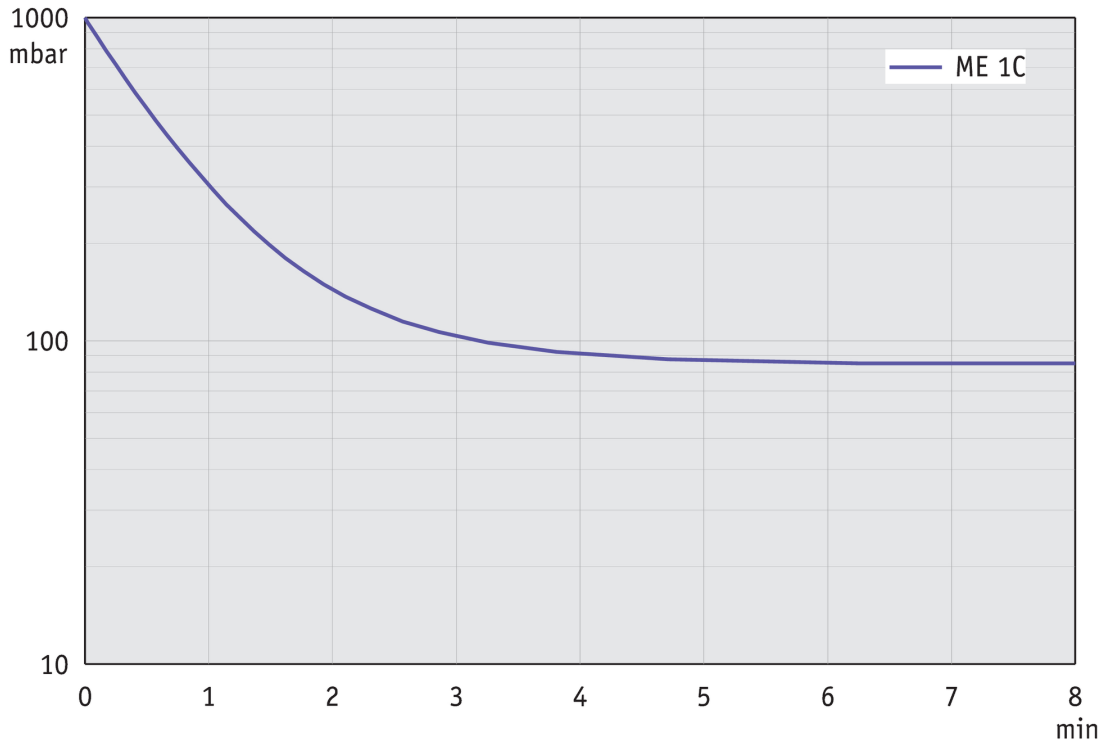

Technical data are subject to change without notice
© VACUUBRAND GMBH + CO KG | 2026

Link to the website:
https://shop.vacuubrand.com/20721105

Dimension sheet



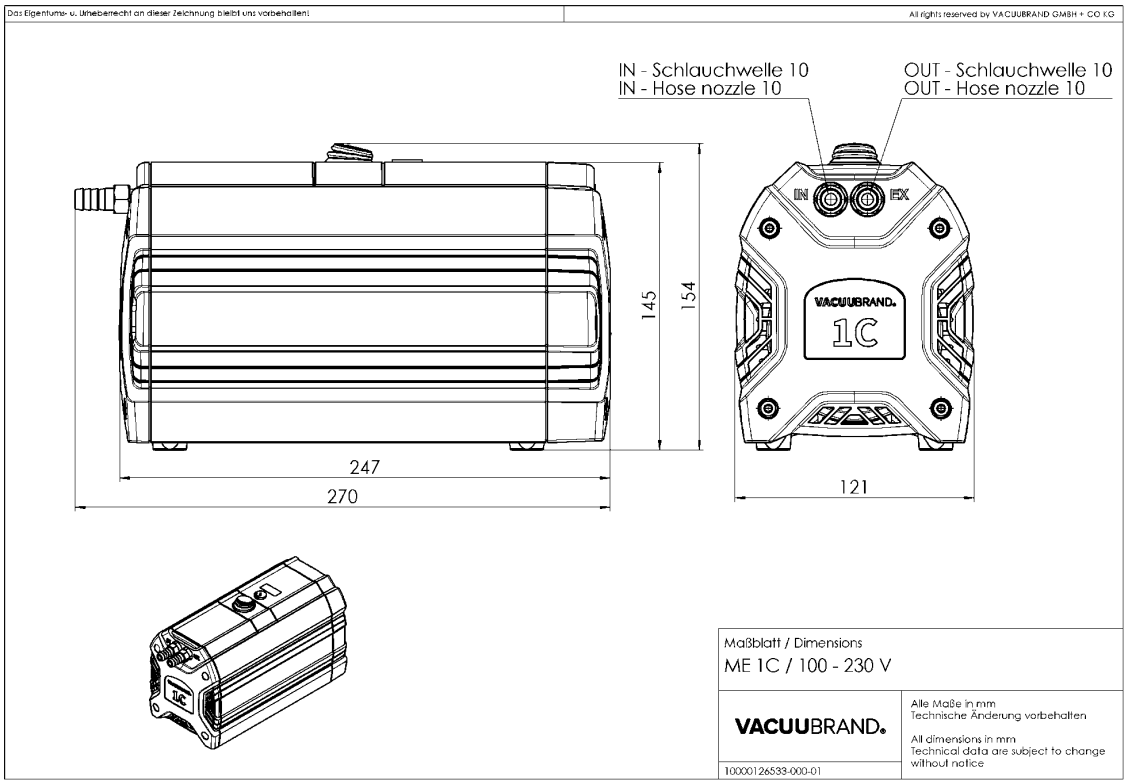

© VACUUBRAND GMBH + CO KG | 2026

Link to the website:
https://shop.vacuubrand.com/20721105

VACUUBRAND GMBH + CO KG
P.O. Box 1664
97877 Wertheim
T +49 9342 808 5550
F +49 9342 808 5555

info@vacuubrand.com
www.vacuubrand.com

VACUUBRAND

VACUUBRAND is part of the Brand group, a manufacturer of high-quality and innovative laboratory equipment and vacuum technology with a global team of approx. 1,000 employees.

With highly motivated and qualified employees, we manufacture the world's most comprehensive product family for vacuum generation, measurement and control for the rough and fine vacuum range in the laboratory.

All with one goal:
Enabling our customers to run reliable, safe and efficient processes. This is why we commit ourselves to continuous innovation, first-class performance, and outstanding quality.

Engineering excellence is central to our ability to deliver products and solutions renowned for their quality, durability, and reliability. Innovative technology, high quality materials and extensive testing deliver unmatched performance - engineered and manufactured in Germany.

Together with you, our experts will find the best solution for your application and provide you with first-class service along the way.

© VACUUBRAND GMBH + CO KG

BRAND (Shanghai) Trading Co., Ltd.
Shanghai, China

T +86 21 6422 2318
info@brand.com.cn
china.brand.com.cn

BRAND Scientific Equipment Pvt. Ltd.
Mumbai, India

T +91 22 42957790
customersupport@brand.co.in
www.brand.co.in

BRANDTECH® Scientific, Inc.
Essex, CT. United States of America

T +1 860 767 2562
info@brandtech.com
www.brandtech.com

BRANDGROUP®