VACUUBRAND®

Chemistry diaphragm pump ME 4C NT



Link to the website

Product description

Chemistry-design diaphragm pumps are an excellent solution for continuous, oil-free pumping of corrosive gases and vapors. The one-stage construction provides the advantageous combination of high pumping speed and low ultimate vacuum down to 70 mbar. All major parts in contact with pumped media are made of chemically resistant fluoroplastics. Well-proven PTFE sandwich diaphragms increase reliability and extend operating life. The NT-series features further improved performance data, higher tolerance for condensates and simplified maintenance. The ME 4C NT is also available as chemistry vacuum system ME 4C NT +2AK with inlet separator to protect the pump against particles and liquid droplets, plus outlet separator to collect condensate.

Performance features

- outstanding chemical resistance
- high performance even at low vacuum levels
- whisper quiet
- low vibration
- long diaphragm life, maintenance-free drive system

Technical data are subject to change without notice
© VACUUBRAND GMBH + CO KG | 2026

Link to the website:
https://shop.vacuubrand.com/20731202

Ordering data

Product name	Nominal mains voltage | mains frequency	Plug type	Articleno.
ME 4C NT	230 V | 50-60 Hz	UK, IN	20731202

Items supplied

Pump completely mounted, ready for use, with manual.

Accessories

- Set of diaphragms and valves ME 4C NT (20696864)
- Silencer with hose 5cm DN 8-10mm (20636588)
- Vacuum tubing transparent DN 8 mm (20686061)

© VACUUBRAND GMBH + CO KG | 2026

Technical data

Max. pumping speed 50 Hz (m^3/h)	3.9 m^3/h
Max. pumping speed 60 Hz (cfm)	2.6 cfm
Ultimate vacuum	70 mbar / 52 torr
Number of heads	2
Number of stages	1
Permissible ambient temperature range (operation)	10 - 40 °C
Permissible ambient temperature range (storage)	-10 - 60 °C
Max. outlet pressure (abs.)	1.1 bar
Inlet connection	Hose nozzle DN 8-10 mm
Outlet connection	Hose nozzle DN 8-10 mm
Rated motor power	0.18 kW
Rated speed 50/60 Hz	1500/1800 min^{-1}
Protection class IEC 60529	IP 40
Dimensions (L x W x H)	254 mm x 243 mm x 198 mm
Weight	11.1 kg
Noise (sound pressure level) in dBA at 50 Hz or 1500 rpm/62% (VARIO)/1500 rpm (VARIO-SP)/12500 Upm (VACUU·PURE®)	45 dBA
ATEX conformity	II 3/- G Ex h IIC T3 Gc X Internal Atm. only
NRTL certification	Yes

Technical data are subject to change without notice
© VACUUBRAND GMBH + CO KG | 2026

Link to the website:
https://shop.vacuubrand.com/20731202

Pumping speed graph at 50 Hz

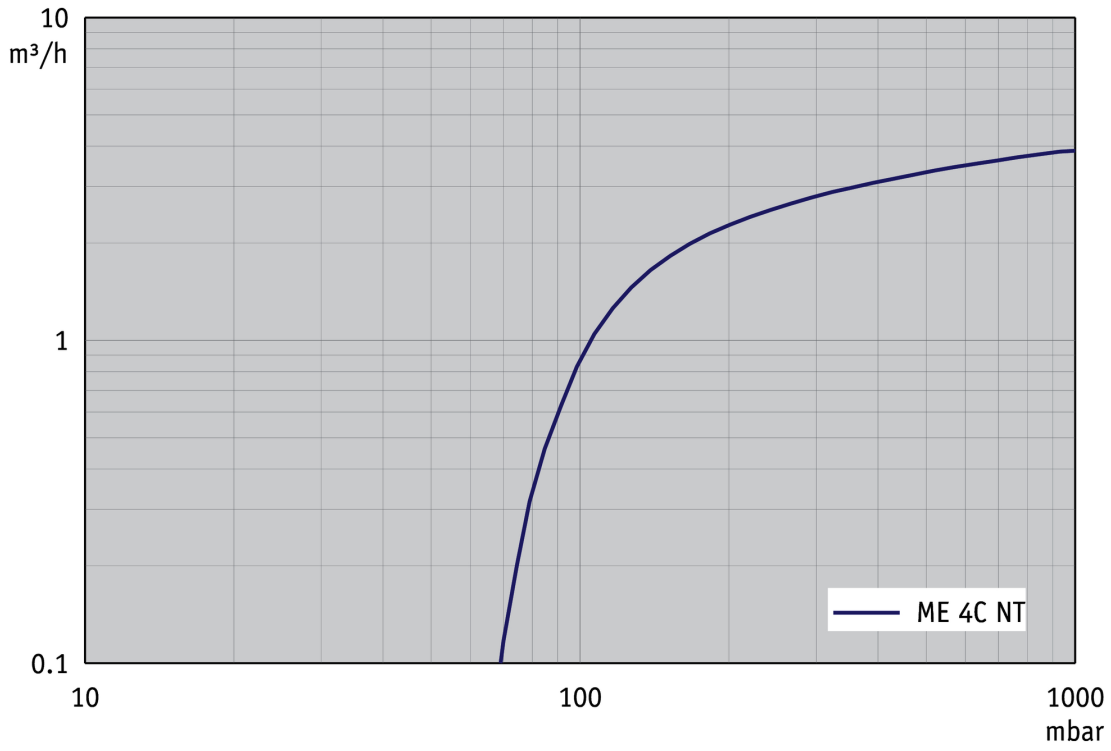

Pump down graph at 50 Hz (10 l volume)

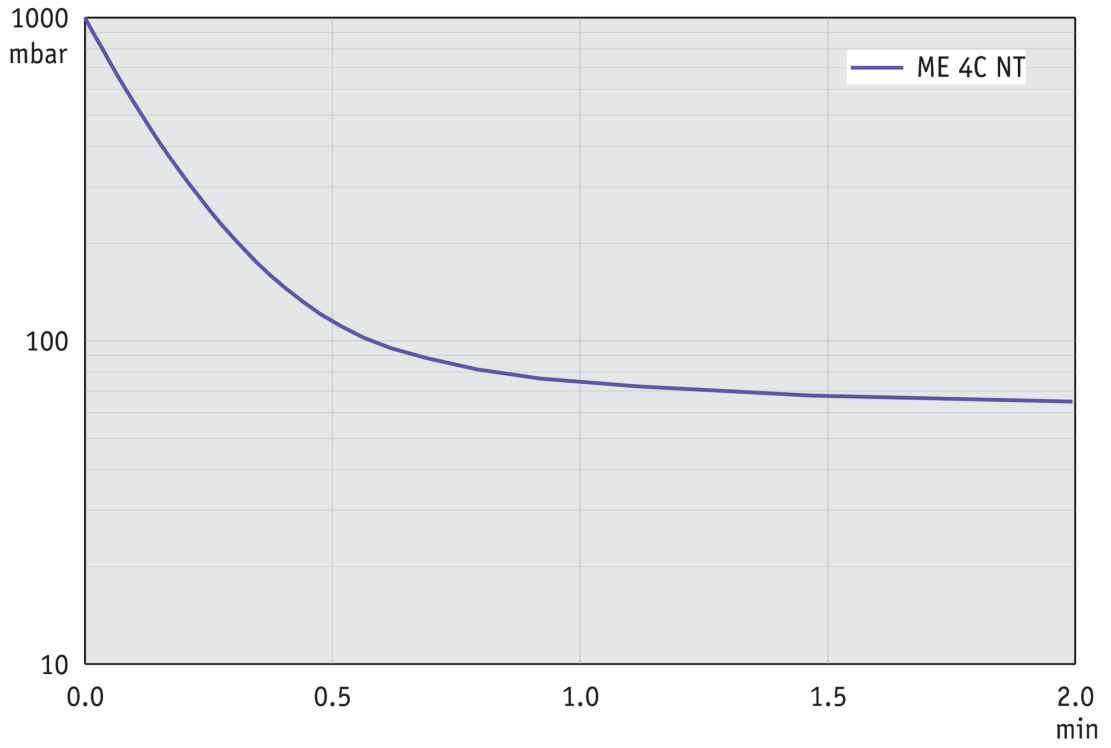

Technical data are subject to change without notice
© VACUUBRAND GMBH + CO KG | 2026

Link to the website:
https://shop.vacuubrand.com/20731202

Pumping speed graph at 60 Hz

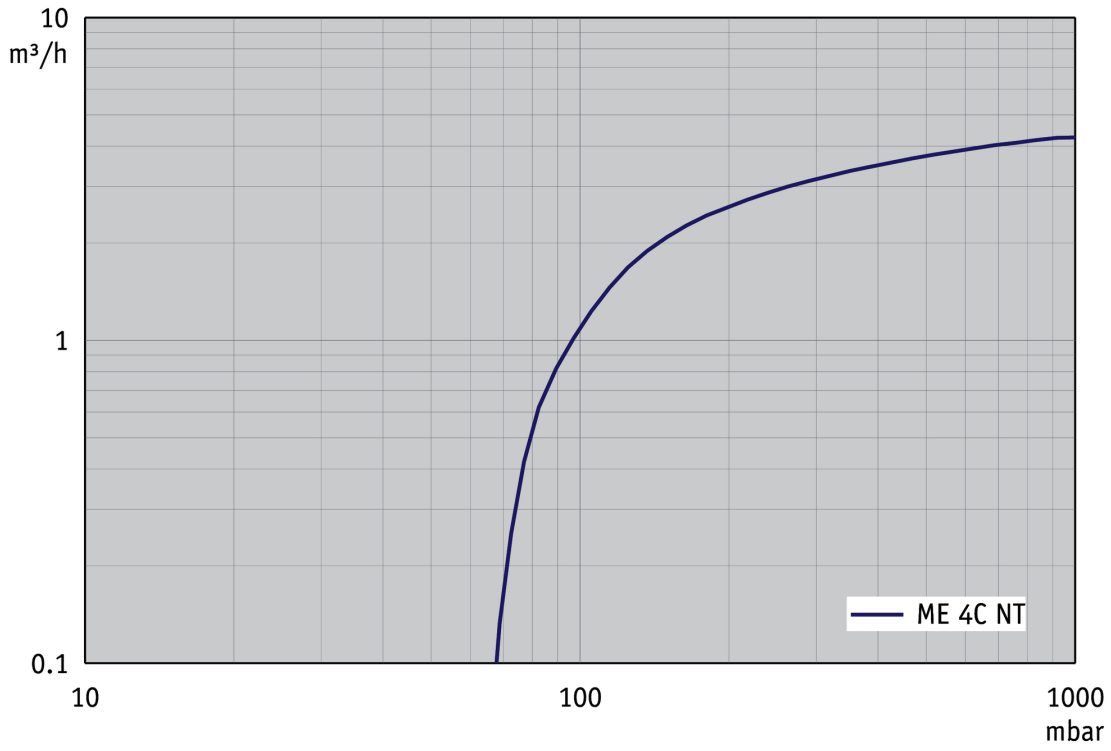

Pump down graph at 60 Hz (10 l volume)

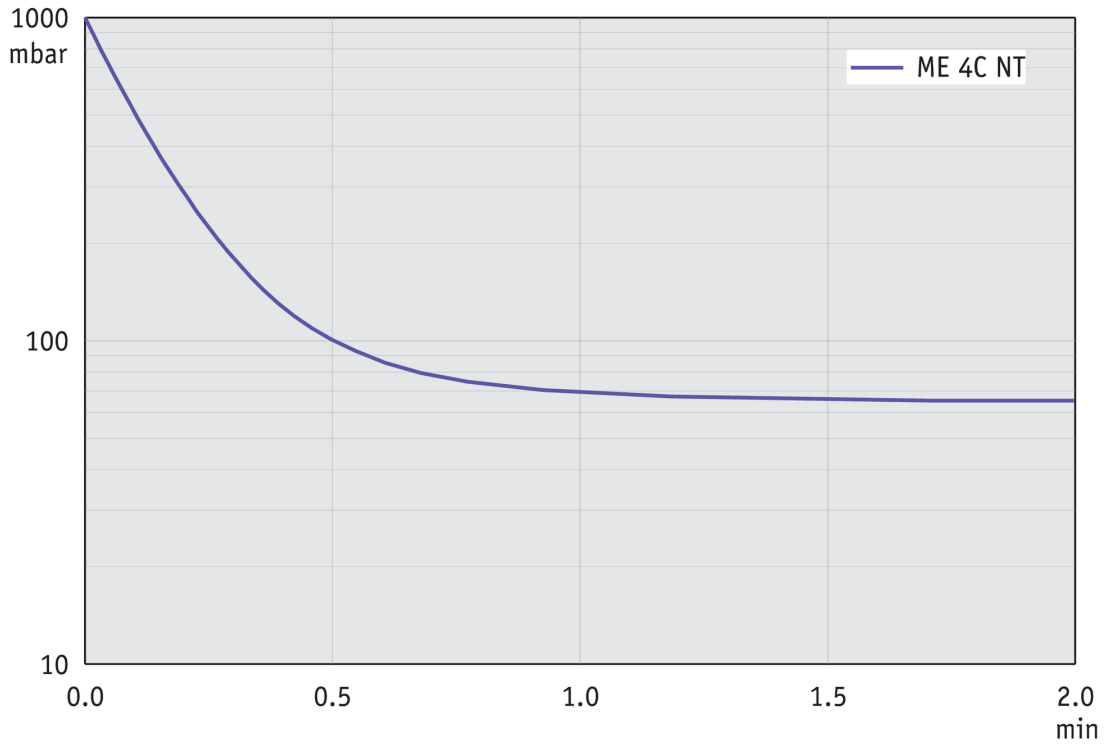

Technical data are subject to change without notice
© VACUUBRAND GMBH + CO KG | 2026

Link to the website:
https://shop.vacuubrand.com/20731202

Dimension sheet



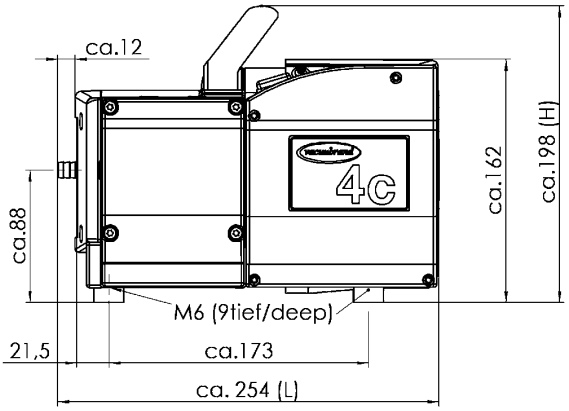

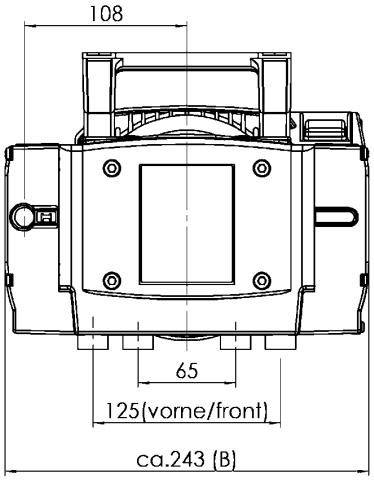

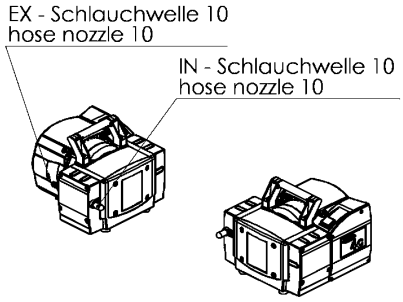

Alle Maße / all dimensions (mm)

VACUUBRAND ME 4C NT
Version 2009/03/17

Technical data are subject to change without notice
© VACUUBRAND GMBH + CO KG | 2026

Link to the website:
https://shop.vacuubrand.com/20731202

VACUUBRAND GMBH + CO KG
P.O. Box 1664
97877 Wertheim
T +49 9342 808 5550
F +49 9342 808 5555

info@vacuubrand.com
www.vacuubrand.com

VACUUBRAND

VACUUBRAND is part of the Brand group, a manufacturer of high-quality and innovative laboratory equipment and vacuum technology with a global team of approx. 1,000 employees.

With highly motivated and qualified employees, we manufacture the world's most comprehensive product family for vacuum generation, measurement and control for the rough and fine vacuum range in the laboratory.

All with one goal:
Enabling our customers to run reliable, safe and efficient processes. This is why we commit ourselves to continuous innovation, first-class performance, and outstanding quality.

Engineering excellence is central to our ability to deliver products and solutions renowned for their quality, durability, and reliability. Innovative technology, high quality materials and extensive testing deliver unmatched performance - engineered and manufactured in Germany.

Together with you, our experts will find the best solution for your application and provide you with first-class service along the way.

© VACUUBRAND GMBH + CO KG

BRAND (Shanghai) Trading Co., Ltd.
Shanghai, China

T +86 21 6422 2318
info@brand.com.cn
china.brand.com.cn

BRAND Scientific Equipment Pvt. Ltd.
Mumbai, India

T +91 22 42957790
customersupport@brand.co.in
www.brand.co.in

BRANDTECH® Scientific, Inc.
Essex, CT. United States of America

T +1 860 767 2562
info@brandtech.com
www.brandtech.com

BRANDGROUP®