VACUUBRAND®

化学真空系统
MD 4C NT +AK+EK Peltronic



网站链接

产品说明

该款化学真空系统广泛应用于化学、生物和制药实验室的排气、蒸发或者气体抽取等过程。系统可很好地满足高沸点溶剂的真空需求。主要用于和旋转蒸发仪或真空干燥箱等仪器连用。进气口收集瓶（AK）为玻璃材质，外覆保护膜，可以防止颗粒或液滴进入泵内。出气口的废气冷凝器（EK）效率高，结构紧凑。该冷凝器可实现近100%的溶剂回收效果，可有效地循环利用溶剂，同时主动地保护环境。

性能特点

- 卓越的化学耐腐蚀性和蒸汽耐受性
- 在较高真空度下仍具有非常好的性能
- 使用气镇仍能达到很好的极限真空
- 排气安静，振动极低
- 高效的溶剂回收系统，使其成为一款环境友好的产品

© VACUUBRAND GMBH + CO KG | 2026

订购信息

产品名称	额定电源电压|工作频率	电源插头类型	订货号
MD 4C NT +AK+EK Peltronic	230 V | 50-60 Hz	IEC 插头 EN 60320	22613972

货品配置

泵，含Peltronic排放冷凝器，附操作手册，不含电源线。

配件

- DN 8-10mm (20636588)
- VACUU·LAN®模块 DN 10/8 mm (20637873)
- 透明真空管 DN 8 mm (20686061)
- 密封圈套装 MD 4C NT/VARIO / PC 3003 / PC 3004 (20696870)
- DN 8-10mm (20636588)
- VACUU·LAN®模块 DN 10/8 mm (20637873)
- 透明真空管 DN 8 mm (20686061)
- 密封圈套装 MD 4C NT/VARIO / PC 3003 / PC 3004 (20696870)
- DN 8-10mm (20636588)
- 透明真空管 DN 8 mm (20686061)
- 密封圈套装 MD 4C NT/VARIO / PC 3003 / PC 3004 (20696870)

© VACUUBRAND GMBH + CO KG | 2026

技术指标

50 Hz **最大抽速** (m^3/h)	3.4 m^3/h
60 Hz **最大抽速** (cfm)	2.2 cfm
极限真空	1.5 mbar / 1.1 torr
极限真空，使用气镇	3 mbar / 2.2 torr
泵头数	4
泵级数	3
的允许环境温度范围（运行）	10 - 40 °C
的允许环境温度范围（存放）	-10 - 60 °C
最大出气口压力 (绝对压力)	1.1 bar
进气口连接	**软管喷嘴接头** DN 8-10 mm
出气口连接	**软管喷嘴接头** DN 8-10 mm
额定电机功率	0.25 kW
额定转速 50/60 Hz	1500/1800 min^{-1}
防护等级	IP 40
尺寸（长x宽x高）	360 mm x 326 mm x 392 mm
重量	21.3 kg
噪音水平 50 Hz/1500 Upm/62% (VARIO)/1500 Upm (VARIO-SP)/12500 Upm (VACUU·PURE®)	45 dBA
ATEX**规格**	II 3/- G Ex h IIC T3 Gc X Internal Atm. only
NRTL **标准**	**否**

© VACUUBRAND GMBH + CO KG | 2026

50 Hz下的抽速曲线

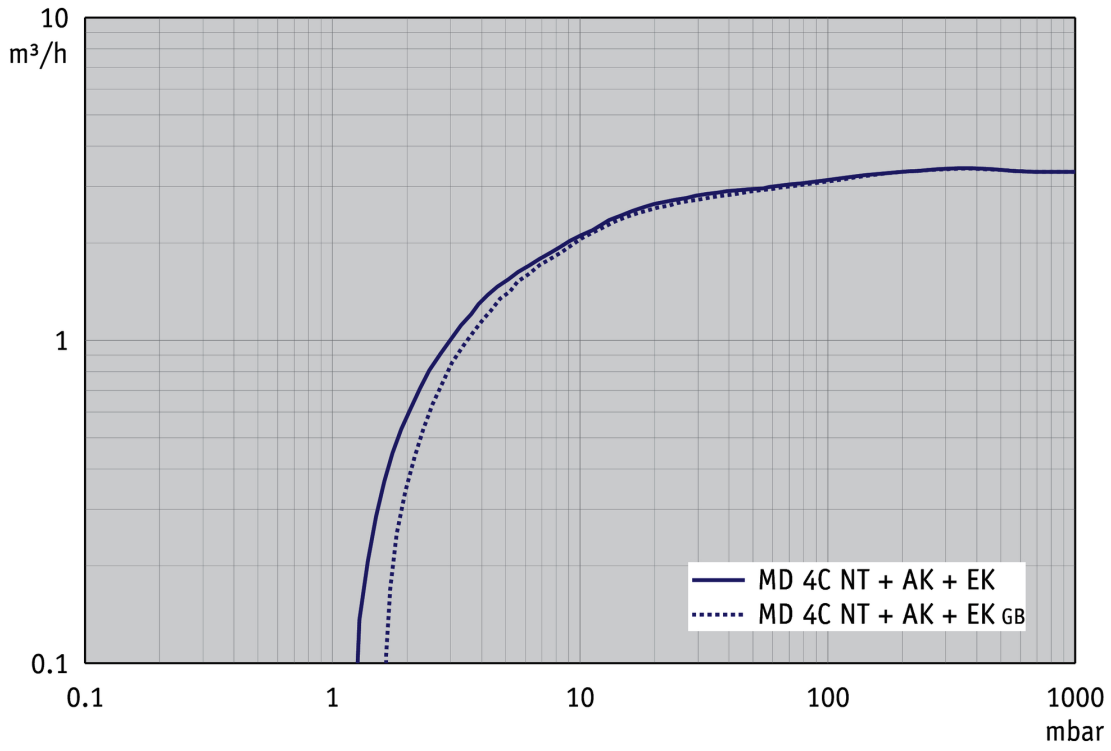

50 Hz下的抽气曲线 （10升容积）

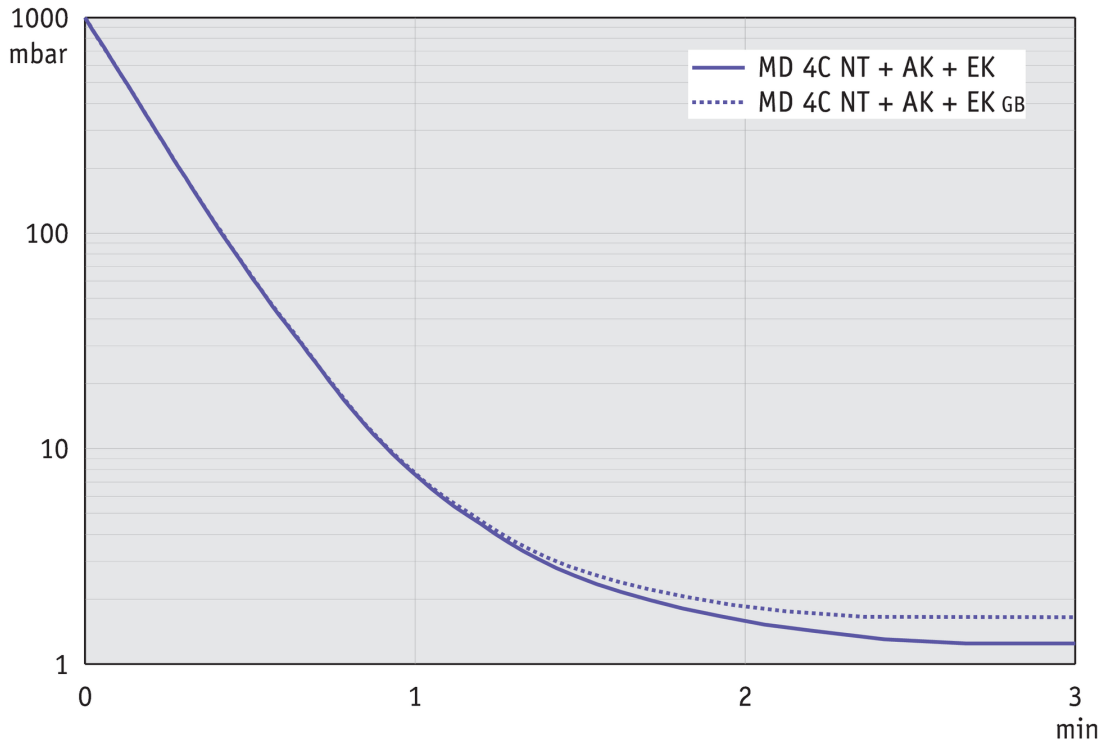

© VACUUBRAND GMBH + CO KG | 2026

60 Hz下的抽速曲线

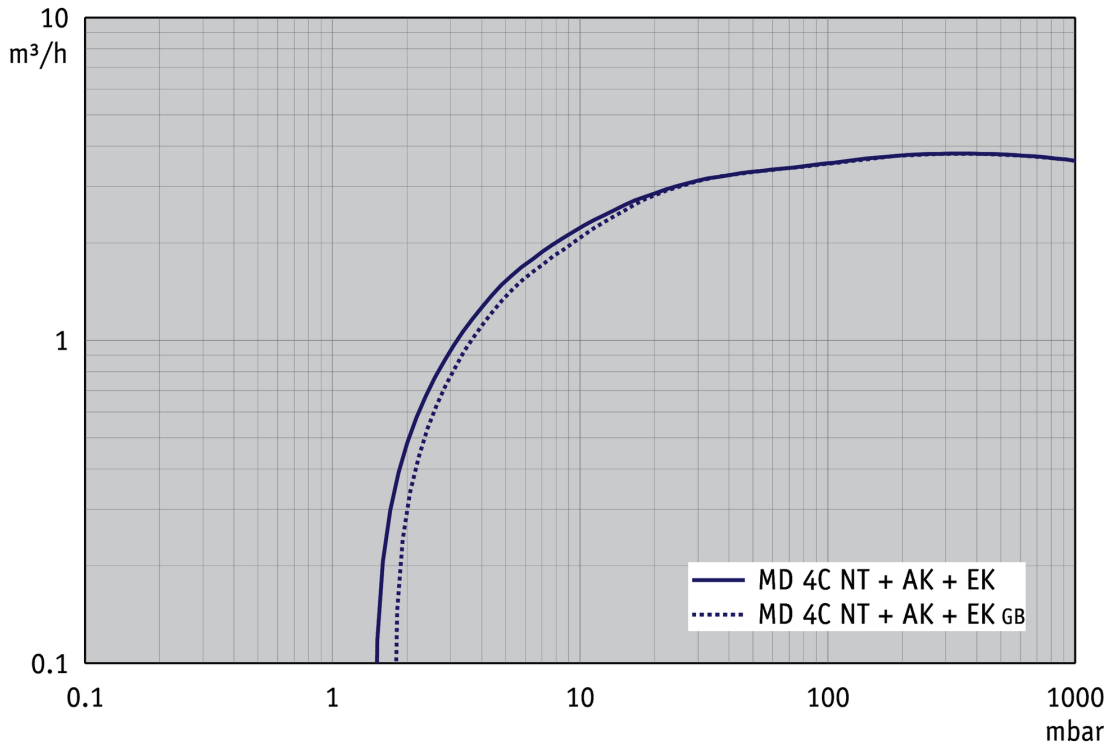

60 Hz下的抽气曲线 （10升容积）

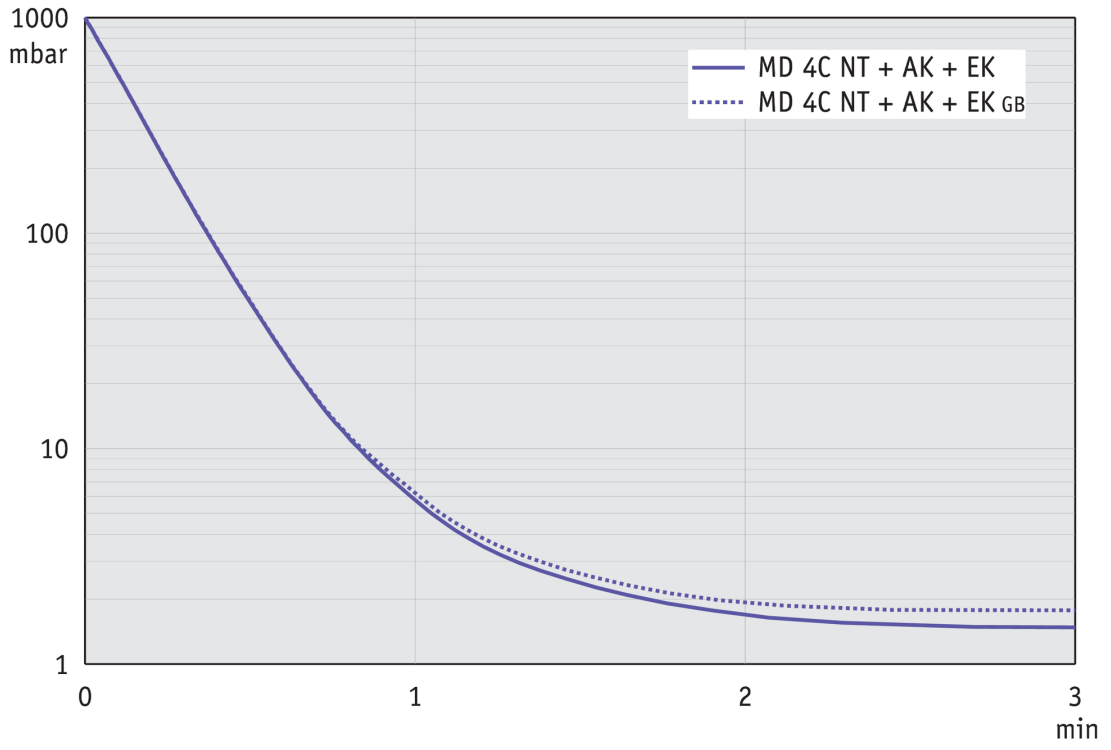

© VACUUBRAND GMBH + CO KG | 2026

尺寸规格表



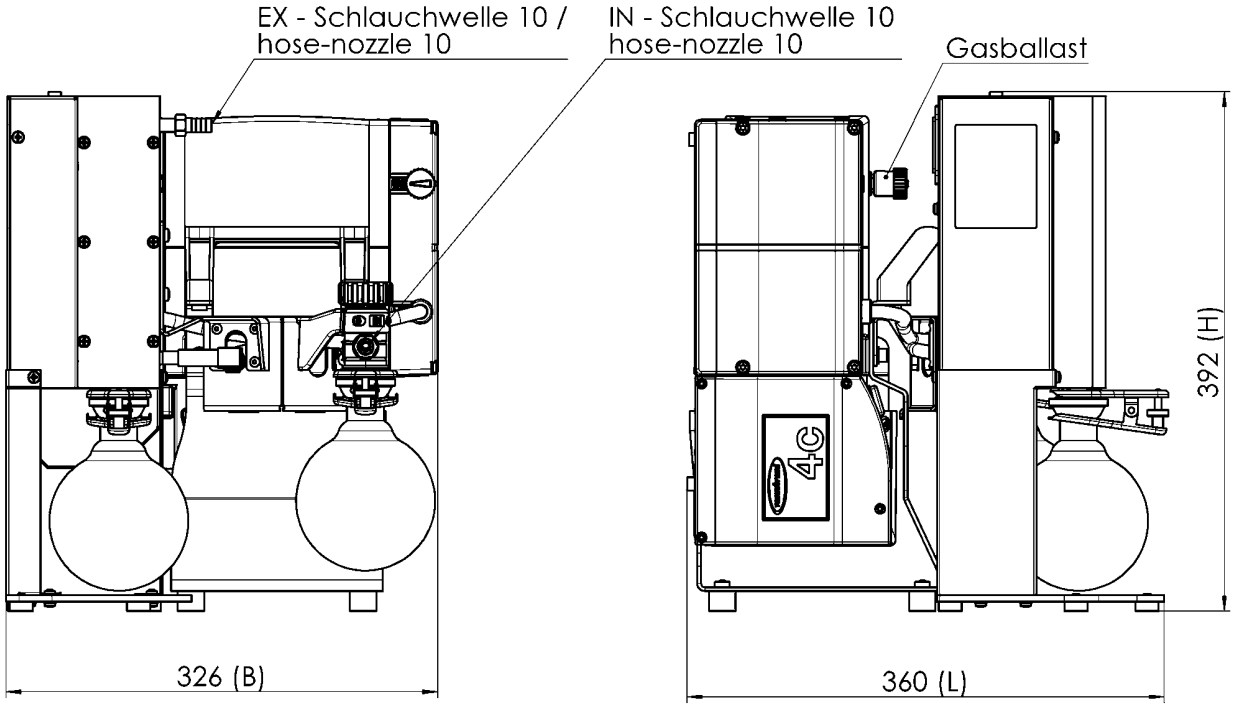

Alle Maße / all dimensions (mm)

VACUUBRAND MD 4C NT AK+EKP
Version 2011/02/03

© VACUUBRAND GMBH + CO KG | 2026

VACUUBRAND GMBH + CO KG
P.O. Box 1664
97877 Wertheim
T +49 9342 808 5550
F +49 9342 808 5555

info@vacuubrand.com
www.vacuubrand.com

VACUUBRAND

VACUUBRAND is part of the Brand group, a manufacturer of high-quality and innovative laboratory equipment and vacuum technology with a global team of approx. 1,000 employees.

With highly motivated and qualified employees, we manufacture the world's most comprehensive product family for vacuum generation, measurement and control for the rough and fine vacuum range in the laboratory.

All with one goal:
Enabling our customers to run reliable, safe and efficient processes. This is why we commit ourselves to continuous innovation, first-class performance, and outstanding quality.

Engineering excellence is central to our ability to deliver products and solutions renowned for their quality, durability, and reliability. Innovative technology, high quality materials and extensive testing deliver unmatched performance - engineered and manufactured in Germany.

Together with you, our experts will find the best solution for your application and provide you with first-class service along the way.

© VACUUBRAND GMBH + CO KG

BRAND (Shanghai) Trading Co., Ltd.
Shanghai, China

T +86 21 6422 2318
info@brand.com.cn
china.brand.com.cn

BRAND Scientific Equipment Pvt. Ltd.
Mumbai, India

T +91 22 42957790
customersupport@brand.co.in
www.brand.co.in

BRANDTECH® Scientific, Inc.
Essex, CT. United States of America

T +1 860 767 2562
info@brandtech.com
www.brandtech.com

BRANDGROUP®