VACUUBRAND®

VARIO® 变频化学真空系统
PC 3003 VARIO select



网站链接

产品说明

PC 3003 VARIO select真空系统能精确控制真空度，以实现无与伦比的工艺过程控制。该泵抽速大，极限真空度高，适用于在低温条件下要求较高的高沸点溶剂应用。集成式的VACUU·SELECT真空控制器搭配了简单易用、基于应用程序的用户界面，内嵌了所有常见的实验室真空应用。VACUU·SELECT真空控制器可满足您所有要求。对于简易实验过程可手动修改控制参数，也可进行全自动蒸馏，或者通过简单的“拖放”操作编辑创建自己的应用程序。在溶剂蒸发过程中，VACUU·SELECT真空控制器能够持续探测溶剂沸点，并按需自动调节真空过程。 该变频控制方法在保持电机运行不超过所需速度的情况下，同时能保持所需的真空度。这能防止碰撞和起泡，使泵运行安静，延长维护间隔时间。进气口分离瓶由玻璃制成，外覆一层保护膜，能防止颗粒和液滴进入泵内，防止泵损坏，延长泵的使用寿命。当连接冷水管道或循环制冷机时，出气口废气冷凝器可以实现溶剂将近100%回收，从而实现循环经济和环境保护。

性能特点

- 配置图形用户界面及预定义应用的VACUU·SELECT真空控制器能简化实验室工作
- 自动沸点探测及真空度调节能够缩短反应时间
- 即使在低温条件下，也是高沸点溶剂蒸发的理想选择
- 超长的膜片寿命，维护周期长且维护成本低
- 优异的环境友好性，极低的能源损耗和高效的溶剂回收率

技术参数如有变化,恕不另行通知

© VACUUBRAND GMBH + CO KG | 2026

网站链接:
https://shop.vacuubrand.com/vp-6389

订购信息

产品名称	额定电源电压|工作频率	电源插头类型	订货号
PC 3003 VARIO select	200-230 V | 50-60 Hz	CEE	20738450
PC 3003 VARIO select	200-230 V | 50-60 Hz	CH	20738451
PC 3003 VARIO select	200-230 V | 50-60 Hz	UK	20738452
PC 3003 VARIO select	100-120 V | 50-60 Hz	US	20738453
PC 3003 VARIO select	200-230 V | 50-60 Hz	CN	20738456
PC 3003 VARIO select	200-230 V | 50-60 Hz	IN	20738457

货品配置

真空系统安装完毕，连接即可使用，附带说明书

配件

- VACUU·SELECT**用户管理** VACUU·SELECT User Management (20700900)
- **透明真空管** DN 8 mm (20686061)
- VACUU·LAN® **模块** DN 10/8 mm (20637873)
- **用于收集瓶的液面探测传感器** 500 ml (20699908)
- **冷凝水阀** VKW-B (20674220)
- **密封圈套装** MD 4C NT/VARIO / PC 3003 / PC 3004 (20696870)
- **密封圈套装** MD 4C NT/VARIO / PC 3003 / PC 3004 (20696870)

© VACUUBRAND GMBH + CO KG | 2026

技术指标

50 Hz **最大抽速** (m^3/h)	2.8 m^3/h
60 Hz **最大抽速** (cfm)	1.65 cfm
极限真空	0.6 mbar / 0.45 torr
极限真空，使用气镇	1.5 mbar / 1.12 torr
泵头数	4
泵级数	4
真空控制器	VACUU·SELECT
的允许环境温度范围（运行）	10 - 40 °C
的允许环境温度范围（存放）	-10 - 60 °C
最大出气口压力 (绝对压力)	1.1 bar
进气口连接	**软管喷嘴接头** DN 8-10 mm
出气口连接	**软管喷嘴接头** DN 8-10 mm
冷却液接口	2**个** DN 6-8 mm **软管喷嘴接头**
额定电机功率	0.53 kW
电机转速范围	30 - 2400 min^{-1}
防护等级	IP 20
尺寸（长x宽x高）	419 mm x 243 mm x 457 mm
重量	21.1 kg
噪音水平 50 Hz/1500 Upm/62% (VARIO)/1500 Upm (VARIO-SP)/12500 Upm (VACUU·PURE®)	43 dBA
ATEX**规格**	II 3/- G Ex h IIC T3 Gc X Internal Atm. only
NRTL **标准**	**否**
通讯	Ethernet (RJ45): Modbus TCP / USB (Type A): Data transfer, software update, RS-232 (additional adapter required)

© VACUUBRAND GMBH + CO KG | 2026

50 Hz下的抽速曲线

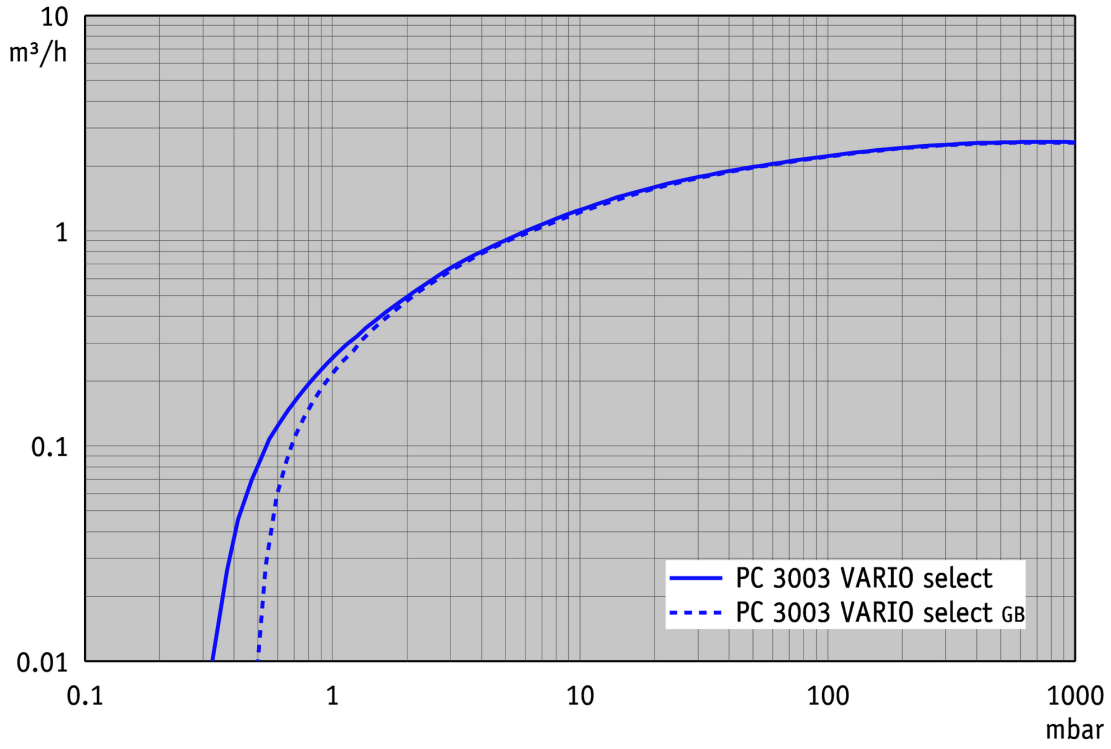

50 Hz下的抽气曲线 （10升容积）

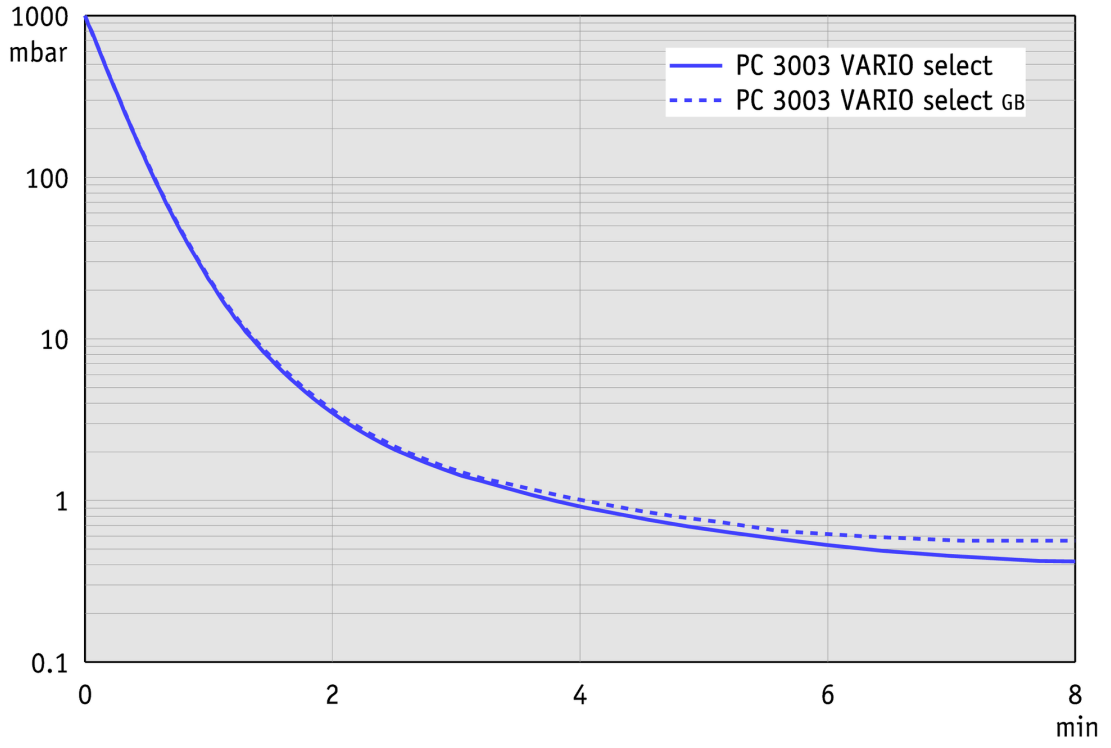

© VACUUBRAND GMBH + CO KG | 2026

尺寸规格表



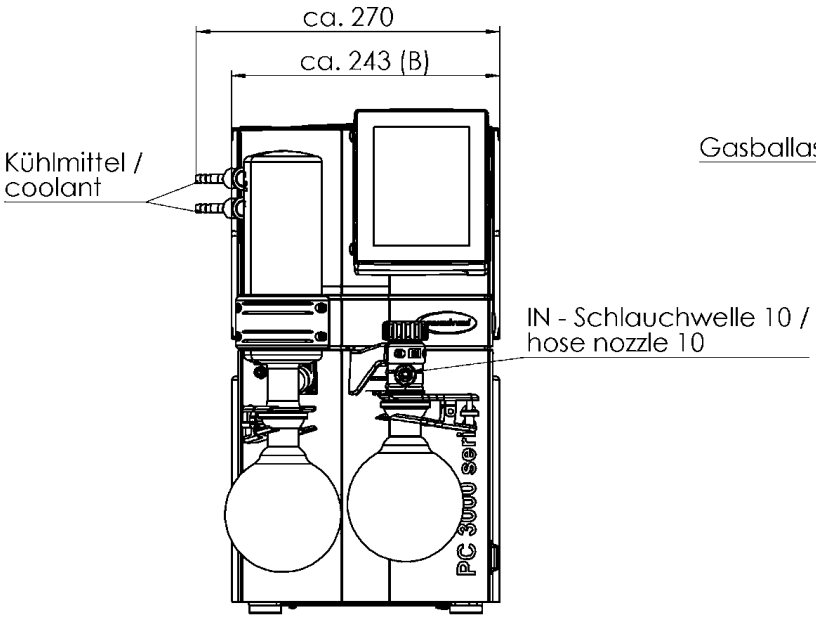

Alle Maße / all dimensions (mm)
Gewicht / weight: ca.21,1 kg

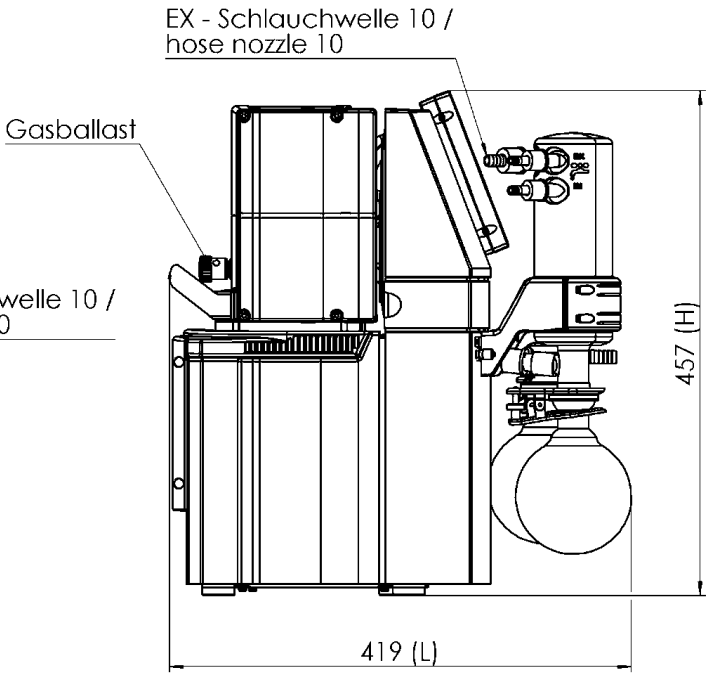

VACUUBRAND PC 3003 VARIO select
Version 2018/04/05

© VACUUBRAND GMBH + CO KG | 2026

网站链接:
https://shop.vacuubrand.com/vp-6389

VACUUBRAND GMBH + CO KG
P.O. Box 1664
97877 Wertheim
T +49 9342 808 5550
F +49 9342 808 5555

info@vacuubrand.com
www.vacuubrand.com

VACUUBRAND

VACUUBRAND is part of the Brand group, a manufacturer of high-quality and innovative laboratory equipment and vacuum technology with a global team of approx. 1,000 employees.

With highly motivated and qualified employees, we manufacture the world's most comprehensive product family for vacuum generation, measurement and control for the rough and fine vacuum range in the laboratory.

All with one goal:
Enabling our customers to run reliable, safe and efficient processes. This is why we commit ourselves to continuous innovation, first-class performance, and outstanding quality.

Engineering excellence is central to our ability to deliver products and solutions renowned for their quality, durability, and reliability. Innovative technology, high quality materials and extensive testing deliver unmatched performance - engineered and manufactured in Germany.

Together with you, our experts will find the best solution for your application and provide you with first-class service along the way.

© VACUUBRAND GMBH + CO KG

BRAND (Shanghai) Trading Co., Ltd.
Shanghai, China

T +86 21 6422 2318
info@brand.com.cn
china.brand.com.cn

BRAND Scientific Equipment Pvt. Ltd.
Mumbai, India

T +91 22 42957790
customersupport@brand.co.in
www.brand.co.in

BRANDTECH® Scientific, Inc.
Essex, CT. United States of America

T +1 860 767 2562
info@brandtech.com
www.brandtech.com

BRANDGROUP®