VACUUBRAND®

化学隔膜泵
ME 16C NT



网站链接

产品说明

专为化学设计的NT型隔膜泵是针对腐蚀性气体和蒸汽的一种持续的、无油抽气的优秀解决方案。单级泵的结构同时具有抽气速度大和达70mbar的极限真空的优点。所有与被抽介质接触的主要部件均由化学防腐的氟塑料制成。经广泛验证的PTFE“三明治”夹层结构膜片不仅增加了稳定性，而且延长了运行寿命。八泵头的ME 16C NT设计紧凑且性能非常优异。进气口收集瓶（AK）用以保护真空泵，出气口冷凝器（EK）用以溶剂回收，这些附件在后期都可以根据需求安装。八泵头的NT系列泵运行安静，表面整洁，易于整理。

性能特点

- 卓越的化学耐腐蚀性和蒸汽耐受性
- 在较高真空水平时仍具有非常大的抽速
- 结构紧凑
- 排气安静，振动极低
- 膜片寿命长，驱动系统免维护

技术参数如有变化,恕不另行通知
© VACUUBRAND GMBH + CO KG | 2026

网站链接:
https://shop.vacuubrand.com/vp-4840

订购信息

产品名称	额定电源电压|工作频率	电源插头类型	订货号
ME 16C NT	200-230 V | 50-60 Hz	CEE	20741300
ME 16C NT	200-230 V | 50-60 Hz	UK, IN	20741302
ME 16C NT	120 V | 50-60 Hz	US	20741303

货品配置

泵体安装完毕，连接即可使用，附带说明书

配件

- 密封圈套装 ME 8C NT (20696867)
- 进气口收集瓶AK，配500ml圆底烧瓶，KF DN 25 法兰接口和DN 15 mm的喷嘴软管接口 AK 500 / KF DN 25 (20699979)
- DN 8-10mm (20636588)
- 小法兰的中心支架 KF DN 20/25 (20660001)
- 小法兰外齐式环形中心支架 KF DN 20/25 (20660196)
- PVC真空管，内置不锈钢螺线，带小法兰 KF DN 25 (20686021)
- 带软管喷嘴接头的小法兰 KF DN 25 / DN 10 mm (20662807)
- 橡胶真空管 DN 10 mm (20686002)
- 密封圈套装 ME 8C NT (20696867)

© VACUUBRAND GMBH + CO KG | 2026

技术指标

50 Hz **最大抽速** (m^3/h)	16.3 m^3/h
60 Hz **最大抽速** (cfm)	9.6 cfm
极限真空	70 mbar / 53 torr
极限真空，使用气镇	100 mbar / 75 torr
泵头数	8
泵级数	1
的允许环境温度范围（运行）	10 - 40 °C
的允许环境温度范围（存放）	-10 - 60 °C
最大出气口压力 (绝对压力)	1.1 bar
进气口连接	KF DN 25 **小法兰**
出气口连接	DN 15 mm **软管喷嘴接头**
额定电机功率	0.53 kW
额定转速 50/60 Hz	1650 min^{-1}
防护等级	IP 40
尺寸（长x宽x高）	533 mm x 260 mm x 359 mm
重量	27.3 kg
噪音水平 50 Hz/1500 Upm/62% (VARIO)/1500 Upm (VARIO-SP)/12500 Upm (VACUU·PURE®)	54 dBA
ATEX**规格**	II 3/- G Ex h IIC T3 Gc X Internal Atm. only
NRTL **标准**	**否**

© VACUUBRAND GMBH + CO KG | 2026

50 Hz下的抽速曲线

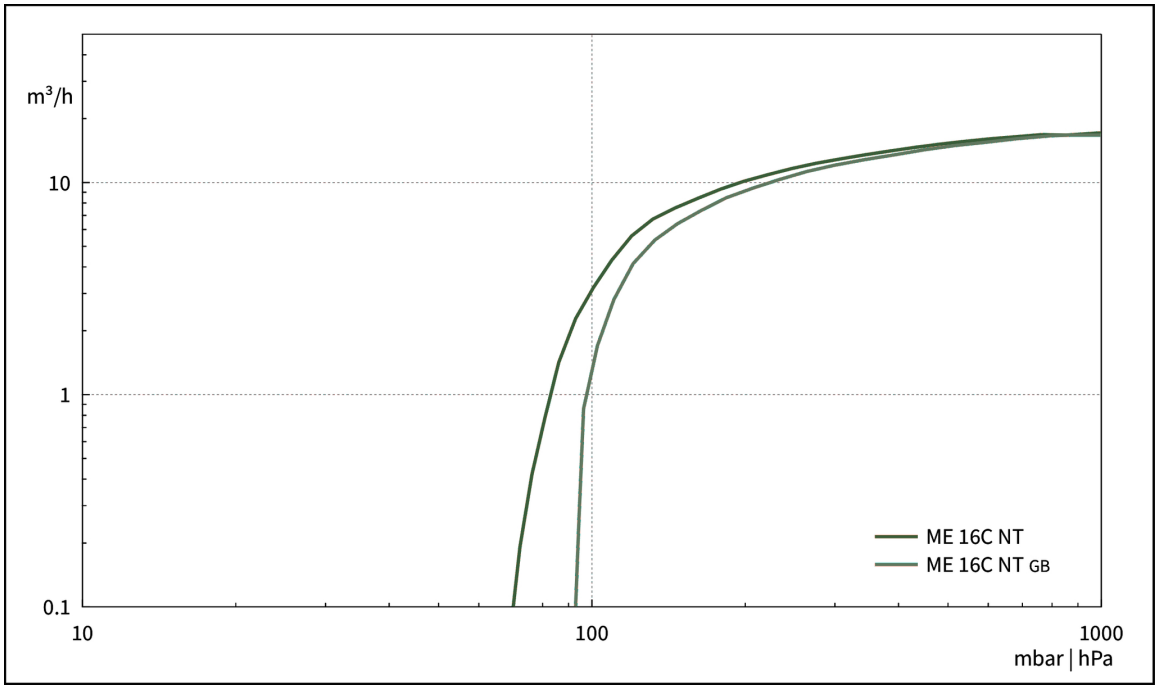

50 Hz下的抽气曲线 （100升容积）

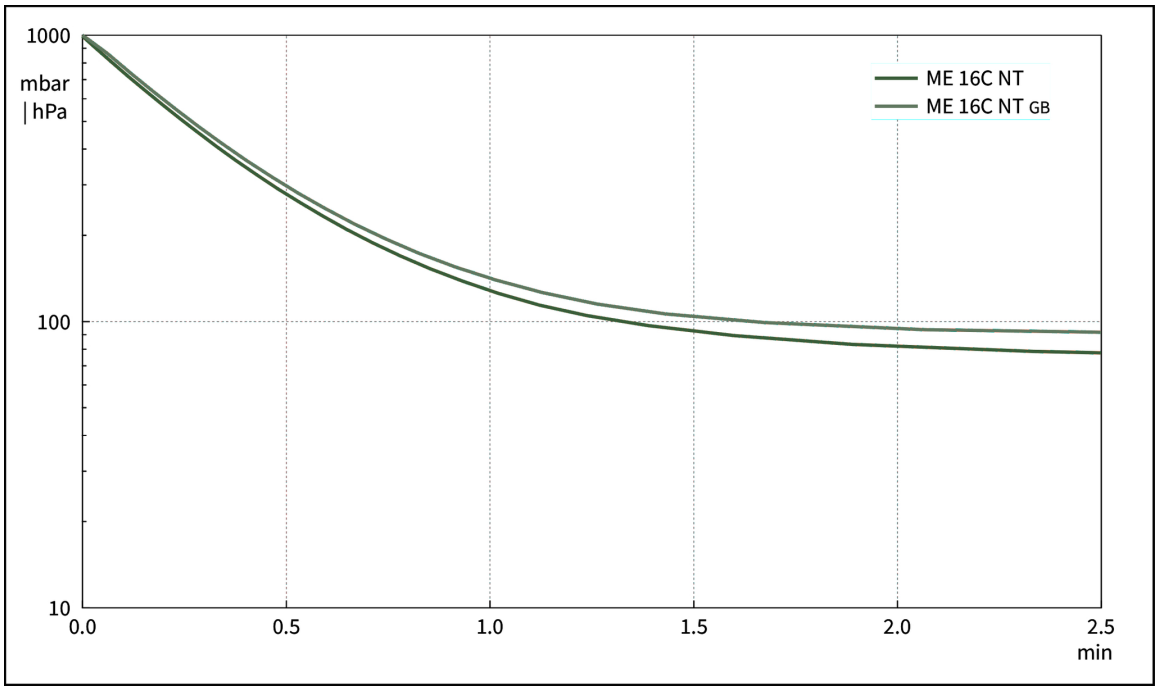

© VACUUBRAND GMBH + CO KG | 2026

尺寸规格表



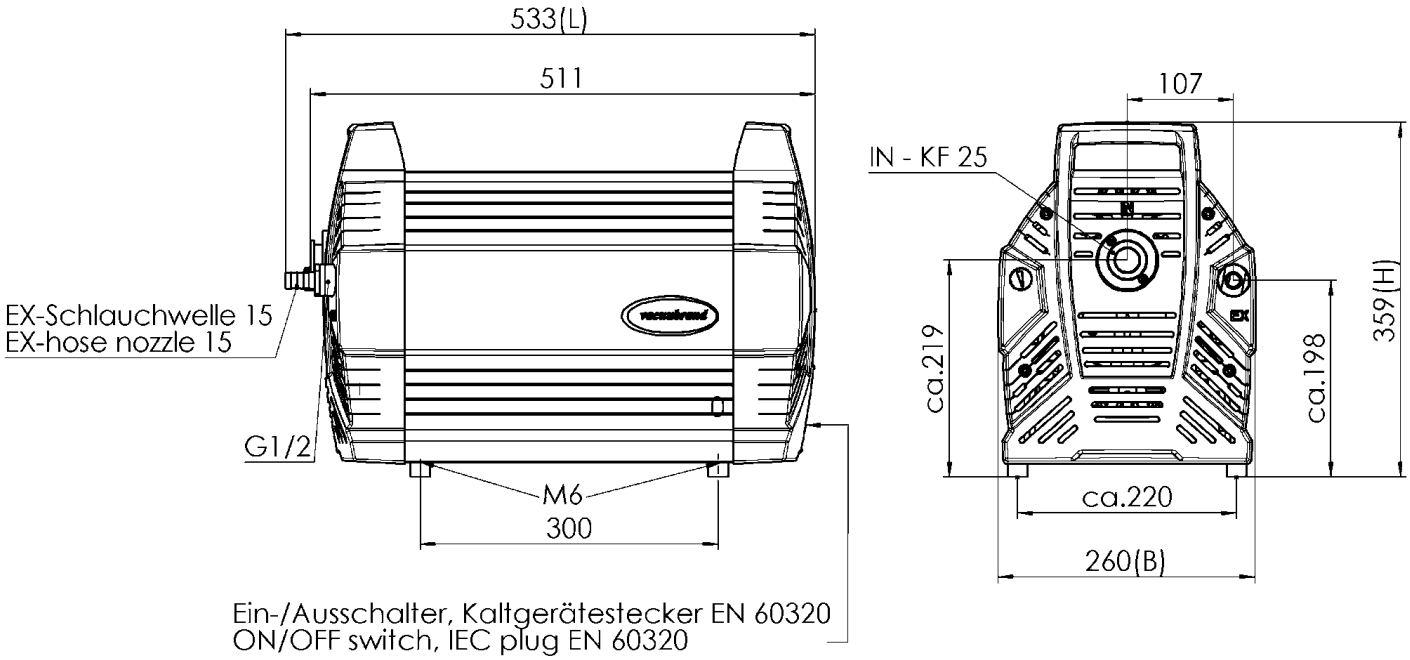

Alle Maße / all dimensions (mm)

VACUUBRAND ME 16C NT, MD 12C NT, MV 10C NT
Version 2012/04/20

© VACUUBRAND GMBH + CO KG | 2026

网站链接:
https://shop.vacuubrand.com/vp-4840

VACUUBRAND GMBH + CO KG
P.O. Box 1664
97877 Wertheim
T +49 9342 808 5550
F +49 9342 808 5555

info@vacuubrand.com
www.vacuubrand.com

VACUUBRAND

VACUUBRAND is part of the Brand group, a manufacturer of high-quality and innovative laboratory equipment and vacuum technology with a global team of approx. 1,000 employees.

With highly motivated and qualified employees, we manufacture the world's most comprehensive product family for vacuum generation, measurement and control for the rough and fine vacuum range in the laboratory.

All with one goal:
Enabling our customers to run reliable, safe and efficient processes. This is why we commit ourselves to continuous innovation, first-class performance, and outstanding quality.

Engineering excellence is central to our ability to deliver products and solutions renowned for their quality, durability, and reliability. Innovative technology, high quality materials and extensive testing deliver unmatched performance - engineered and manufactured in Germany.

Together with you, our experts will find the best solution for your application and provide you with first-class service along the way.

© VACUUBRAND GMBH + CO KG

BRAND (Shanghai) Trading Co., Ltd.
Shanghai, China

T +86 21 6422 2318
info@brand.com.cn
china.brand.com.cn

BRAND Scientific Equipment Pvt. Ltd.
Mumbai, India

T +91 22 42957790
customersupport@brand.co.in
www.brand.co.in

BRANDTECH® Scientific, Inc.
Essex, CT. United States of America

T +1 860 767 2562
info@brandtech.com
www.brandtech.com

BRANDGROUP®