VACUUBRAND®

隔膜泵
ME 1



网站链接

产品说明

真空抽滤是化学、微生物、废水控制和其他分析过程等最常用的一种样品制备方法。全新ME 1隔膜泵结构非常小巧，性能卓越，且非常便于操作，非常适用于单联抽滤。该系列泵是基于无油隔膜泵MD 1的成功技术上的全新发展，性能经广泛验证，并有超长的膜片寿命。电源开关置于泵顶部的明显位置，节省空间且设计新颖，在实验室的日常使用中，这会显得非常便捷且节省时间。PTFE材质的膜片和阀具有极佳的耐化学腐蚀性。可选配一个带真空表头的手动控制阀，用于微调抽速和真空值。

性能特点

- 全新顶置式电源开关，操作便捷、快速且简单
- 排气安静，振动极低
- 只需占用非常少的实验台空间
- 驱动系统免维护，膜片寿命超长
- 流体接触部件材料：PTFE，铝

技术参数如有变化,恕不另行通知
© VACUUBRAND GMBH + CO KG | 2026

网站链接:
https://shop.vacuubrand.com/20721005

订购信息

产品名称	额定电源电压|工作频率	电源插头类型	订货号
ME 1	220-230 V | 50-60 Hz 100-115 V | 50-60 Hz 120 V | 60 Hz	IEC **插头** EN 60320	20721005

货品配置

泵体安装完毕，连接即可使用，附带说明书

配件

- **透明真空管** DN 8 mm (20686061)
- **真空调节阀组件** ME 1 (20696842)
- **密封圈套装** ME 1, ME 1C, VP 100, VP 100C (20696874)

© VACUUBRAND GMBH + CO KG | 2026

技术指标

50 Hz **最大抽速** (m^3/h)	0.7 m^3/h
60 Hz **最大抽速** (cfm)	0.5 cfm
极限真空	100 mbar / 75 torr
泵头数	1
泵级数	1
的允许环境温度范围（运行）	10 - 40 °C
的允许环境温度范围（存放）	-10 - 60 °C
最大出气口压力 (**绝对压力**)	1.1 bar
进气口连接	**软管喷嘴接头** DN 6-10 mm
出气口连接	**消音器** / G1/8"
额定电机功率	0.04 kW
额定转速 50/60 Hz	1500/1800 min^{-1}
防护等级	IP 40
尺寸（长x宽x高）	270 mm x 121 mm x 155 mm
重量	5.4 kg
噪音水平 50 Hz/1500 Upm/62% (VARIO)/1500 Upm (VARIO-SP)/12500 Upm (VACUU·PURE®)	49 dBA
ATEX**规格**	II 3/- G Ex h IIC T3 Gc X Internal Atm. only
NRTL **标准**	**是**

© VACUUBRAND GMBH + CO KG | 2026

50 Hz下的抽速曲线

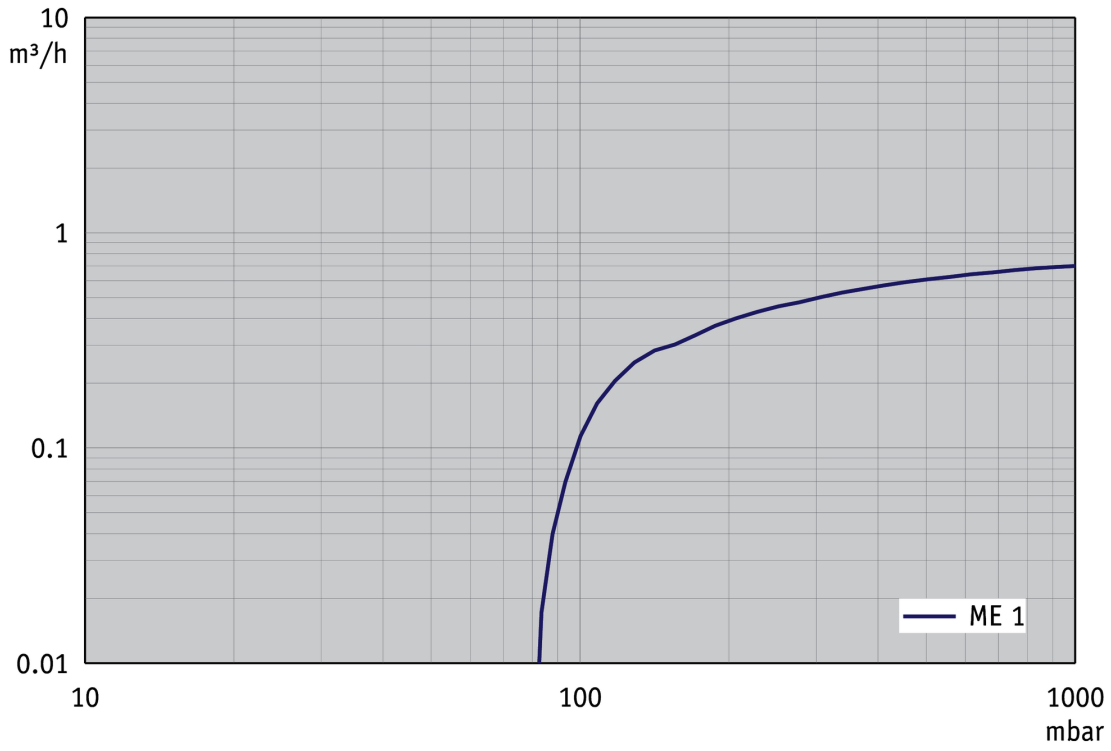

50 Hz下的抽气曲线 （10升容积）

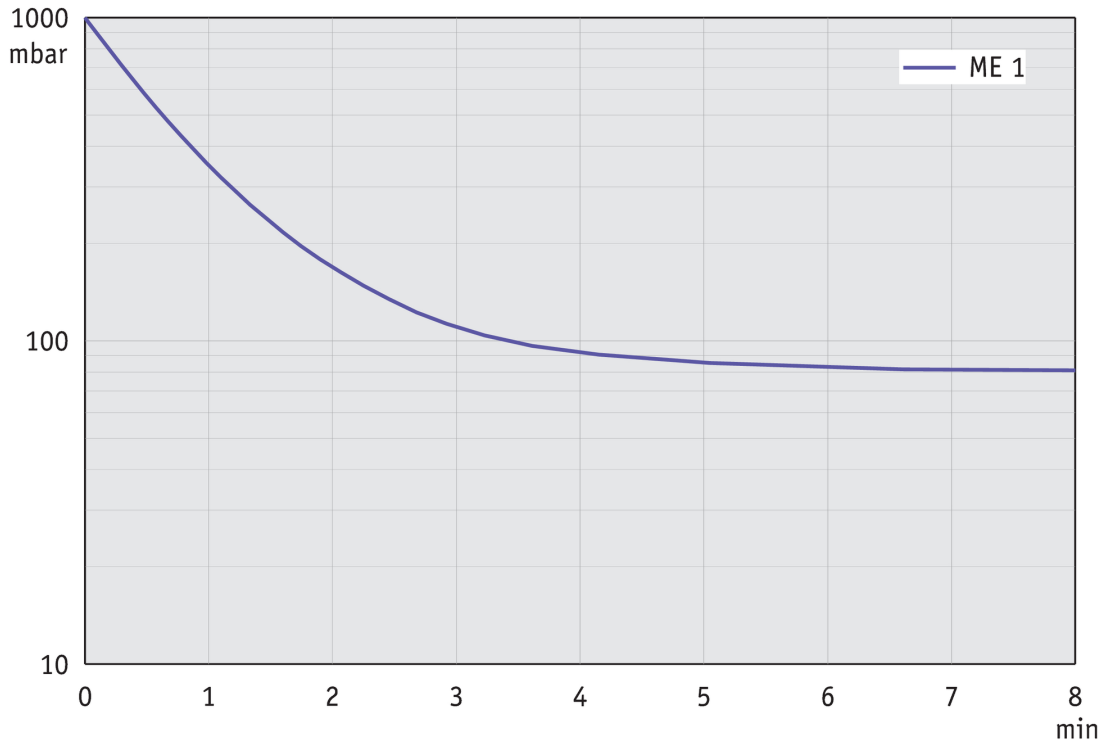

© VACUUBRAND GMBH + CO KG | 2026

60 Hz下的抽速曲线

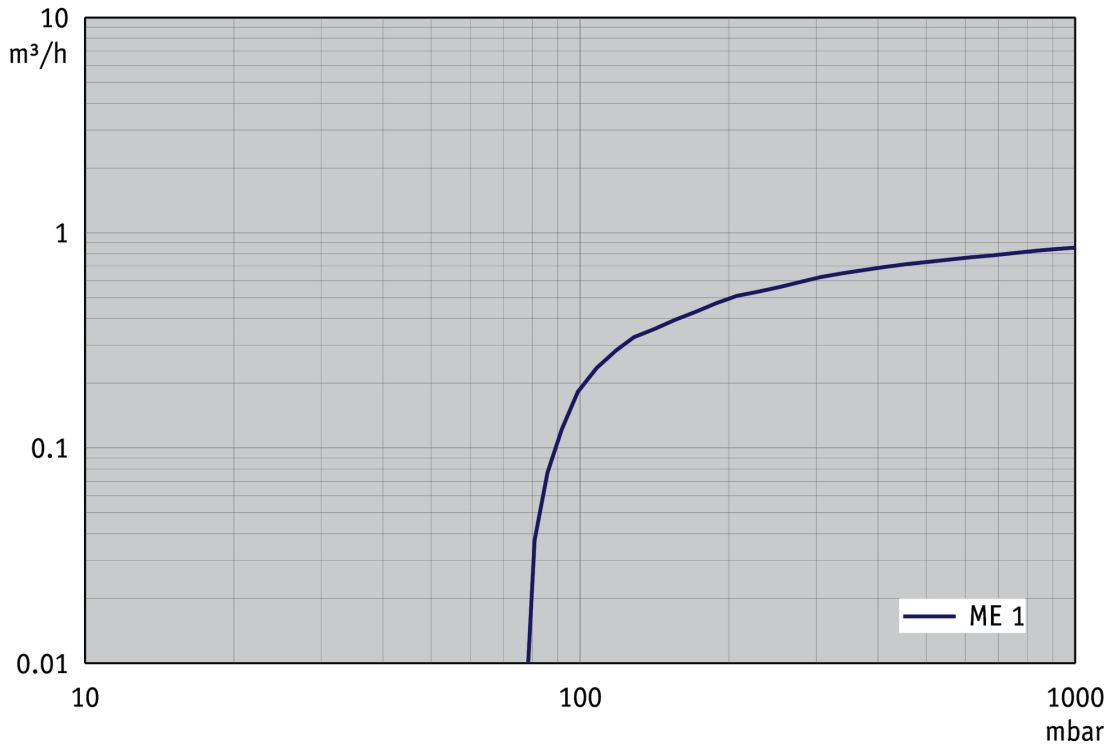

60 Hz下的抽气曲线 （10升容积）

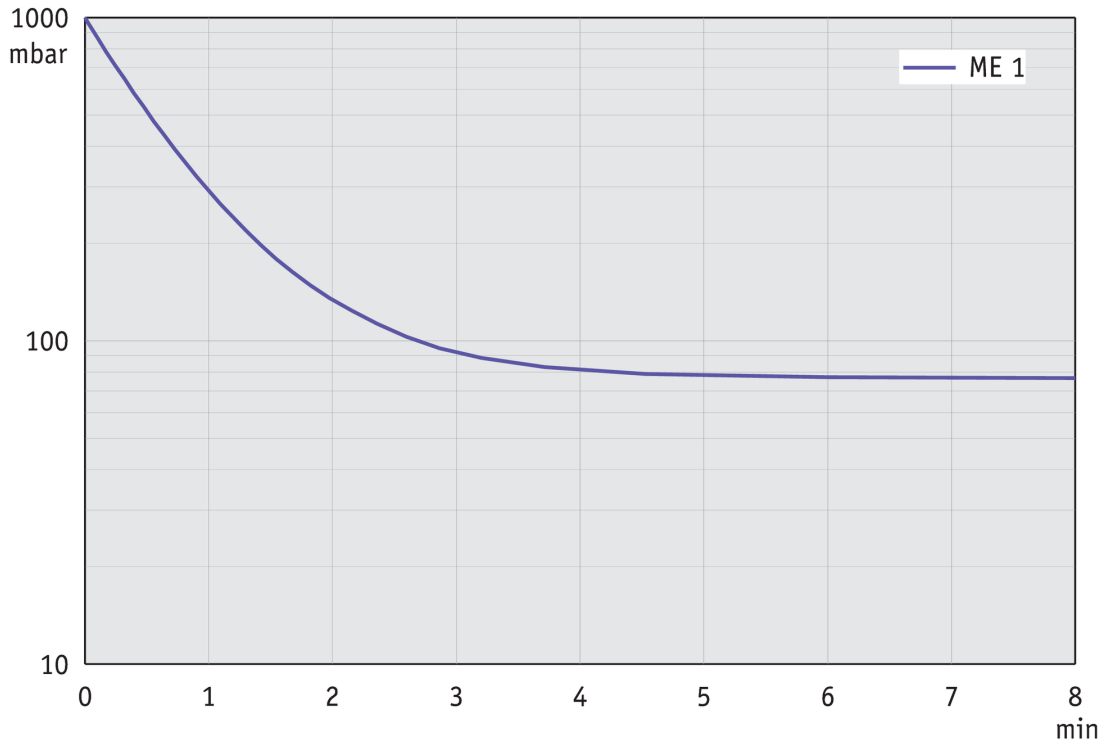

© VACUUBRAND GMBH + CO KG | 2026

尺寸规格表



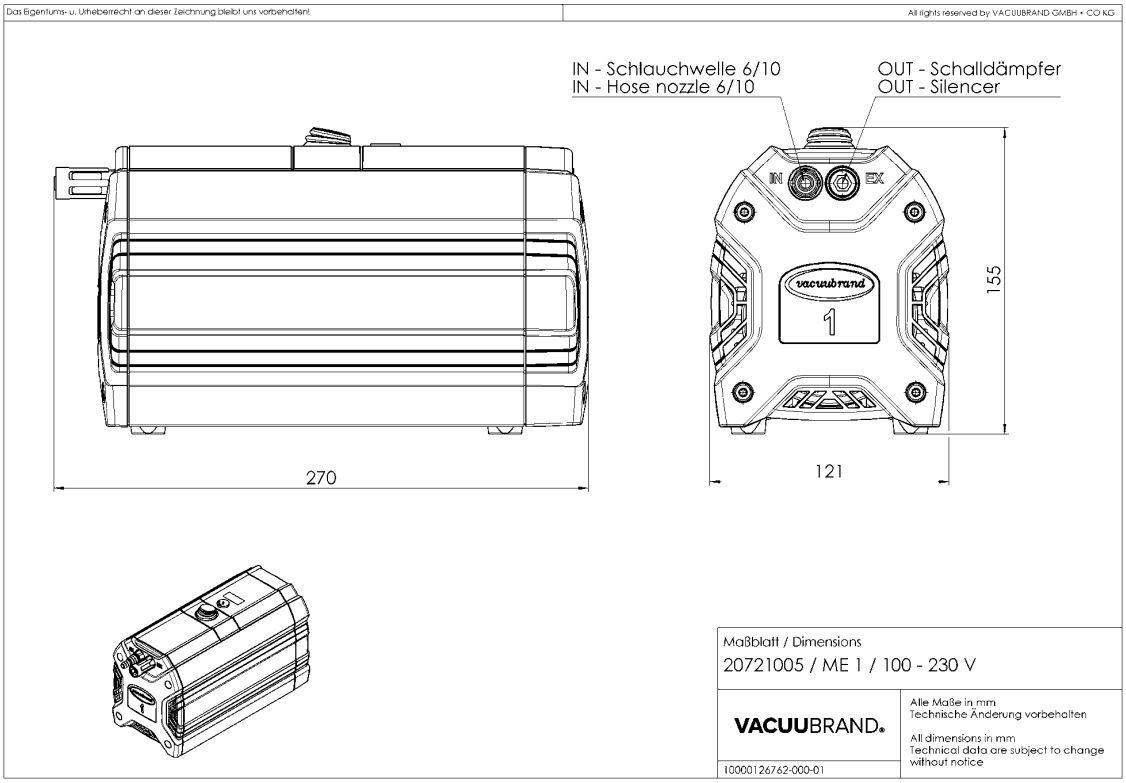

© VACUUBRAND GMBH + CO KG | 2026

VACUUBRAND GMBH + CO KG
P.O. Box 1664
97877 Wertheim
T +49 9342 808 5550
F +49 9342 808 5555

info@vacuubrand.com
www.vacuubrand.com

VACUUBRAND

VACUUBRAND is part of the Brand group, a manufacturer of high-quality and innovative laboratory equipment and vacuum technology with a global team of approx. 1,000 employees.

With highly motivated and qualified employees, we manufacture the world's most comprehensive product family for vacuum generation, measurement and control for the rough and fine vacuum range in the laboratory.

All with one goal:
Enabling our customers to run reliable, safe and efficient processes. This is why we commit ourselves to continuous innovation, first-class performance, and outstanding quality.

Engineering excellence is central to our ability to deliver products and solutions renowned for their quality, durability, and reliability. Innovative technology, high quality materials and extensive testing deliver unmatched performance - engineered and manufactured in Germany.

Together with you, our experts will find the best solution for your application and provide you with first-class service along the way.

© VACUUBRAND GMBH + CO KG

BRAND (Shanghai) Trading Co., Ltd.
Shanghai, China

T +86 21 6422 2318
info@brand.com.cn
china.brand.com.cn

BRAND Scientific Equipment Pvt. Ltd.
Mumbai, India

T +91 22 42957790
customersupport@brand.co.in
www.brand.co.in

BRANDTECH® Scientific, Inc.
Essex, CT. United States of America

T +1 860 767 2562
info@brandtech.com
www.brandtech.com

BRANDGROUP®