VACUUBRAND®

化学隔膜泵
ME 2C NT



网站链接

产品说明

单级隔膜泵是持续地、无油地抽取气体或蒸汽的优秀解决方案，用于无需很高真空度的应用。在日常使用中，与水喷射泵相比，它们不需要消耗水资源，因此也不会产生任何废水。主要应用于中等气载的真空烘箱，单联抽滤或多联抽滤。通常该设备非常适用于抽取气体和无油排气。单级的结构使泵同时具有抽气速度大和达到70mbar极限真空的优点。

性能特点

- 排气安静，振动极低
- 进行多联操作时仍有很强的吸力
- 在低真空值时仍能保持很好的性能
- 卓越的化学耐腐蚀性
- 隔膜寿命长，驱动系统免维护

技术参数如有变化,恕不另行通知

© VACUUBRAND GMBH + CO KG | 2026

网站链接:
https://shop.vacuubrand.com/vp-4710

订购信息

产品名称	额定电源电压|工作频率	电源插头类型	订货号
ME 2C NT	230 V | 50-60 Hz	CEE	20730100
ME 2C NT	230 V | 50-60 Hz	UK, IN	20730102
ME 2C NT	100-115 V | 50-60 Hz 120 V | 60 Hz	US	20730103

货品配置

泵体安装完毕，连接即可使用，附带说明书

配件

- **密封圈套装** ME 2C NT (20696878)
- DN 8-10mm (20636588)
- **透明真空管** DN 8 mm (20686061)

© VACUUBRAND GMBH + CO KG | 2026

技术指标

50 Hz **最大抽速** (m^3/h)	2.1 m^3/h
60 Hz **最大抽速** (cfm)	1.4 cfm
极限真空	70 mbar / 52 torr
泵头数	1
泵级数	1
的允许环境温度范围（运行）	10 - 40 °C
的允许环境温度范围（存放）	-10 - 60 °C
最大出气口压力 (**绝对压力**)	1.1 bar
进气口连接	**软管喷嘴接头** DN 8-10 mm
出气口连接	**软管喷嘴接头** DN 8-10 mm
额定电机功率	0.18 kW
额定转速 50/60 Hz	1500/1800 min^{-1}
防护等级	IP 40
尺寸（长x宽x高）	243 mm x 211 mm x 198 mm
重量	10.2 kg
噪音水平 50 Hz/1500 Upm/62% (VARIO)/1500 Upm (VARIO-SP)/12500 Upm (VACUU·PURE®)	45 dBA
ATEX**规格**	II 3/- G Ex h IIC T3 Gc X Internal Atm. only
NRTL **标准**	**是**

© VACUUBRAND GMBH + CO KG | 2026

50 Hz下的抽速曲线

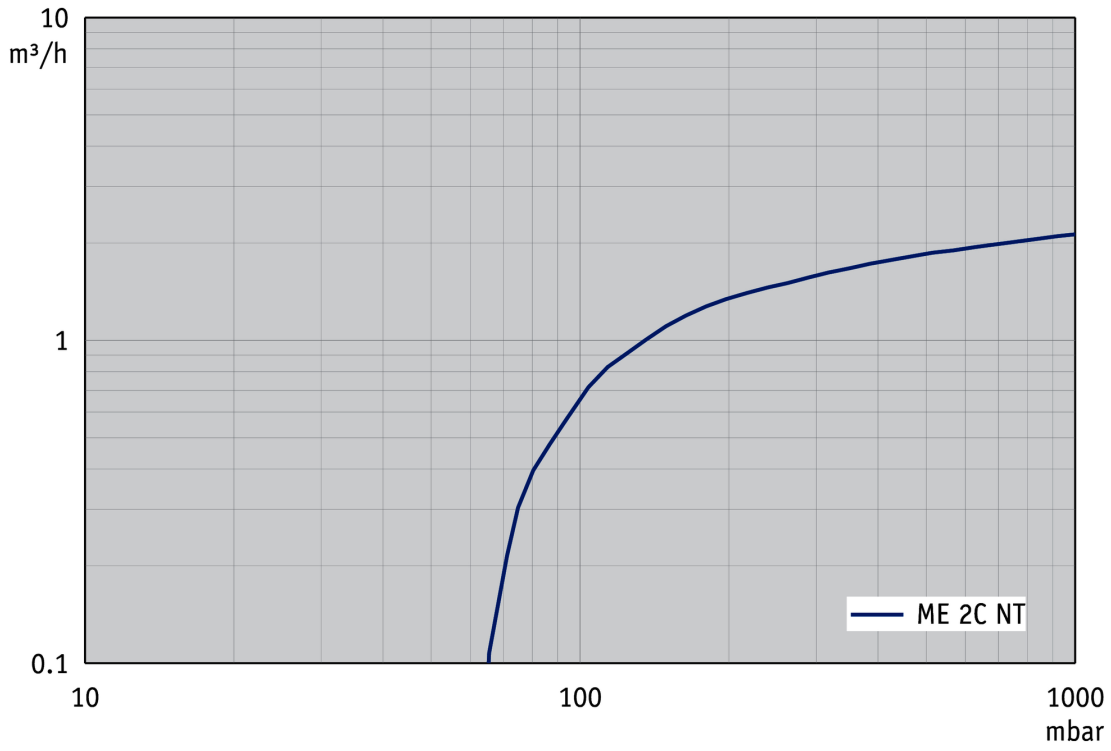

50 Hz下的抽气曲线 （10升容积）

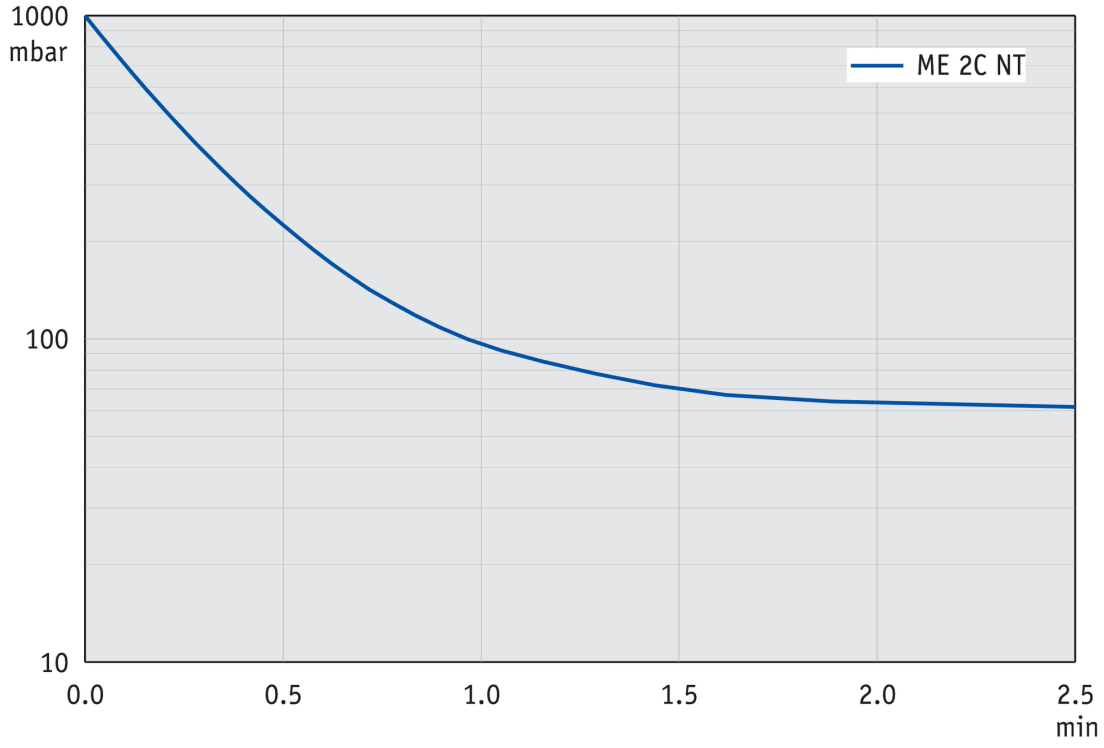

© VACUUBRAND GMBH + CO KG | 2026

60 Hz下的抽速曲线

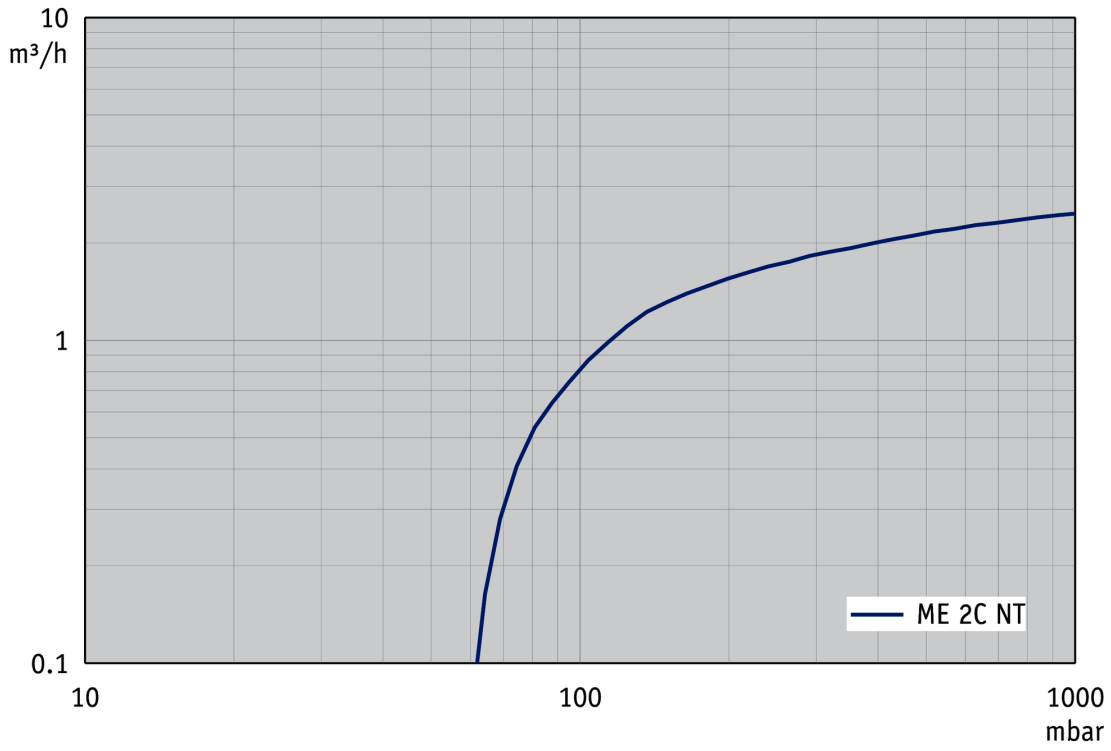

60 Hz下的抽气曲线 （10升容积）

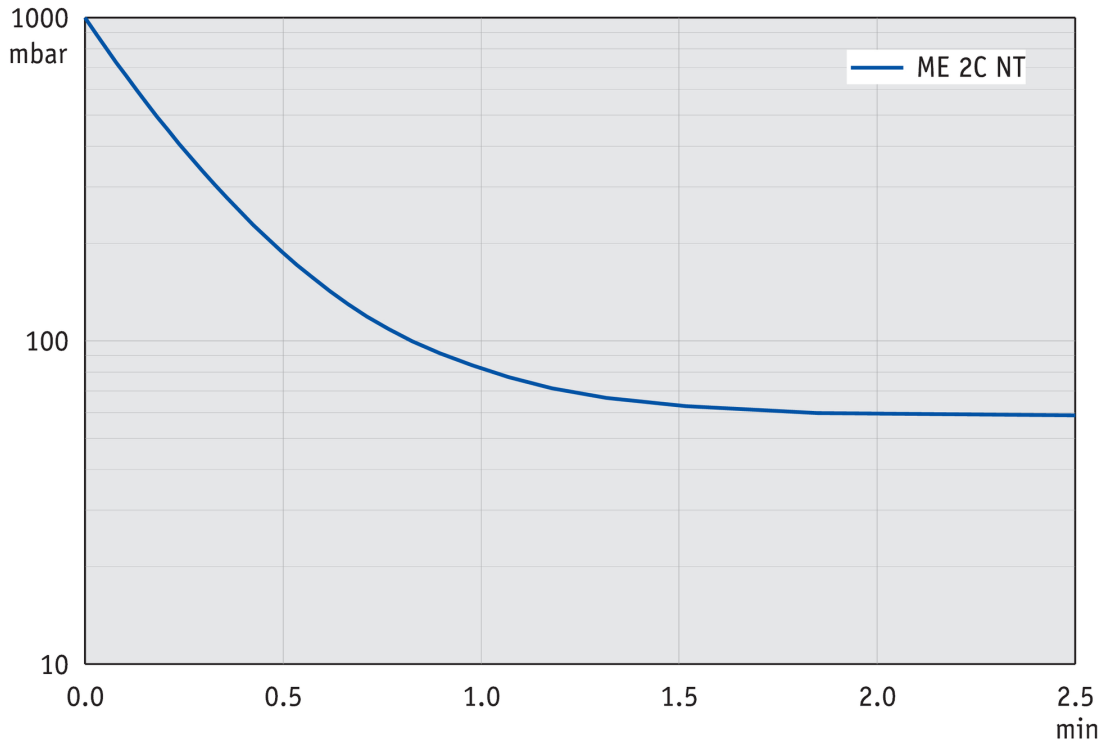

© VACUUBRAND GMBH + CO KG | 2026

尺寸规格表



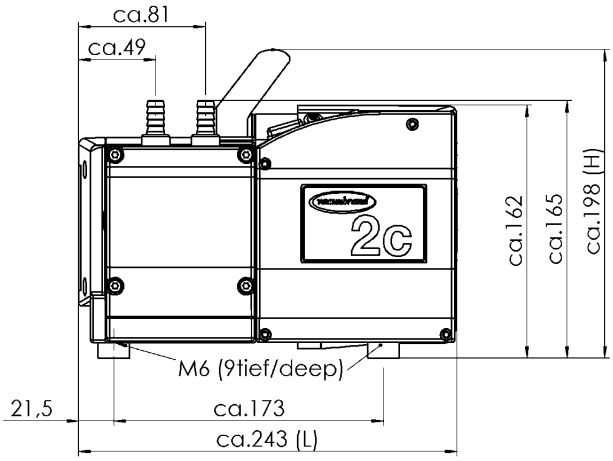

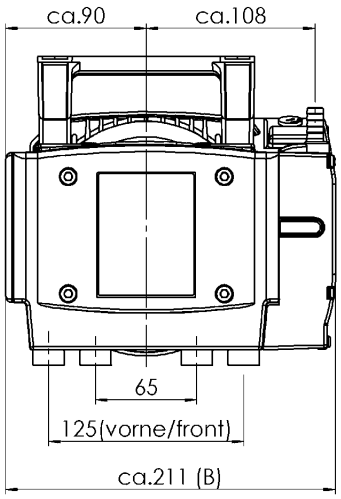

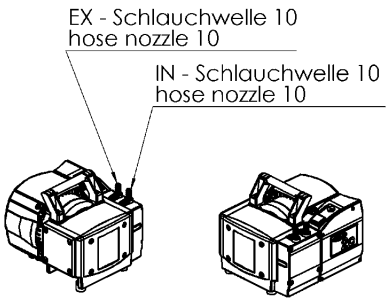

Alle Maße / all dimensions (mm)

VACUUBRAND ME 2C NT 100-230V
Version 2011/11/28

技术参数如有变化,恕不另行通知

© VACUUBRAND GMBH + CO KG | 2026

网站链接:
https://shop.vacuubrand.com/vp-4710

VACUUBRAND GMBH + CO KG
P.O. Box 1664
97877 Wertheim
T +49 9342 808 5550
F +49 9342 808 5555

info@vacuubrand.com
www.vacuubrand.com

VACUUBRAND

VACUUBRAND is part of the Brand group, a manufacturer of high-quality and innovative laboratory equipment and vacuum technology with a global team of approx. 1,000 employees.

With highly motivated and qualified employees, we manufacture the world's most comprehensive product family for vacuum generation, measurement and control for the rough and fine vacuum range in the laboratory.

All with one goal:
Enabling our customers to run reliable, safe and efficient processes. This is why we commit ourselves to continuous innovation, first-class performance, and outstanding quality.

Engineering excellence is central to our ability to deliver products and solutions renowned for their quality, durability, and reliability. Innovative technology, high quality materials and extensive testing deliver unmatched performance - engineered and manufactured in Germany.

Together with you, our experts will find the best solution for your application and provide you with first-class service along the way.

© VACUUBRAND GMBH + CO KG

BRAND (Shanghai) Trading Co., Ltd.
Shanghai, China

T +86 21 6422 2318
info@brand.com.cn
china.brand.com.cn

BRAND Scientific Equipment Pvt. Ltd.
Mumbai, India

T +91 22 42957790
customersupport@brand.co.in
www.brand.co.in

BRANDTECH® Scientific, Inc.
Essex, CT. United States of America

T +1 860 767 2562
info@brandtech.com
www.brandtech.com

BRANDGROUP®