VACUUBRAND®

化学隔膜泵
MV 10C EX +AK+EK



网站链接

产品说明

ATEX防爆化学隔膜泵具有无油化学隔膜泵的所有优点。主要应用于有潜在爆炸气氛的旋转蒸发仪或真空干燥箱等。ATEX防护包括泵腔内（与所抽气体接触）及泵的外界环境。泵的所有沾湿部件都具有非常好的耐化学腐蚀性，并主要由抗静电材料制成。发货时配备一个单独的气镇接口，用于连接惰性气体源。

性能特点

- 卓越的化学耐腐蚀性和蒸汽耐受性
- 直接连接230V / 50Hz 单相电源的防爆型电机， 集成自锁过载和过热保护
- 现有的保护措施完全满足了客户的所有技术要求
- 内部和出气口有过压安全泄压阀
- 可靠的膜片安全技术，可附加惰性气体吹扫和膜片破损保护

订购信息

产品名称	额定电源电压|工作频率	电源插头类型	订货号
MV 10C EX +AK+EK	230 V | 50 Hz	裸线	22614250

货品配置

泵体安装完毕，连接即可，配10米无插头电缆，附带说明书。MV 10C EX泵带两根电缆（两个电机）。 配AK和EK（500）

配件

- 密封圈套装 MZ 2C EX, MD 4C EX (2x), MV 10C EX (4x) (20696837)

© VACUUBRAND GMBH + CO KG | 2026

网站链接:
https://shop.vacuubrand.com/22614250

技术指标

50 Hz 最大抽速 (m^3/h)	8.1 m^3/h
极限真空	2 mbar / 1.5 torr
极限真空，使用气镇	10 mbar / 7.5 torr
泵头数	8
泵级数	4
的允许环境温度范围（运行）	10 - 40 °C
的允许环境温度范围（存放）	-10 - 60 °C
最大出气口压力 (绝对压力)	1.1 bar
进气口连接	KF DN 25 小法兰
出气口连接	软管喷嘴接头 DN 8-10 mm
冷却液接口	2个 DN 6-8 mm 软管喷嘴接头
额定电机功率	0.5 kW
额定转速 50/60 Hz	1500 min^{-1}
防护等级	IP 54
尺寸（长x宽x高）	649 mm x 525 mm x 452 mm
重量	68.0 kg
噪音水平 50 Hz/1500 Upm/62% (VARIO)/1500 Upm (VARIO-SP)/12500 Upm (VACUU·PURE®)	52 dBA
ATEX规格	抽气腔（所抽气体）：II 2G Ex h IIC T3 Gb X 使用惰性气体吹扫的环境：II 2G Ex h IIB T4 Gb X 不使用惰性气体吹扫的环境：II 3G Ex h IIB T4 Gc X Motor: II 2G Ex db IIB T4 Gb
NRTL 标准	否

© VACUUBRAND GMBH + CO KG | 2026

50 Hz下的抽速曲线

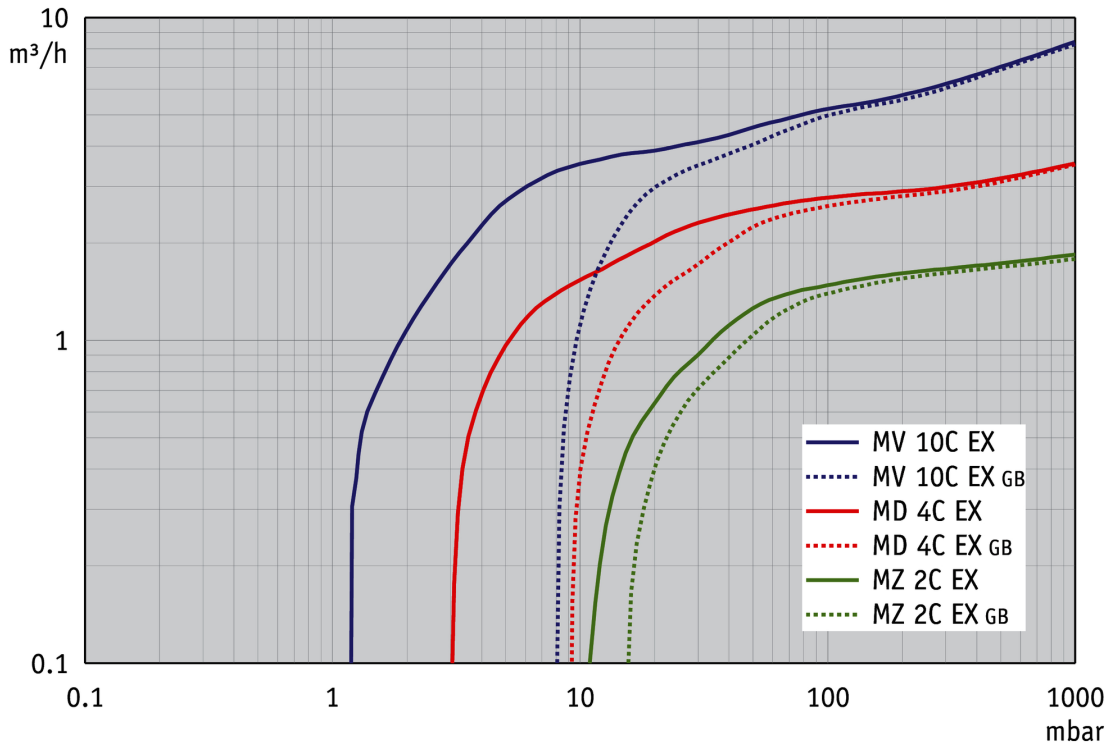

50 Hz下的抽气曲线 （100升容积）

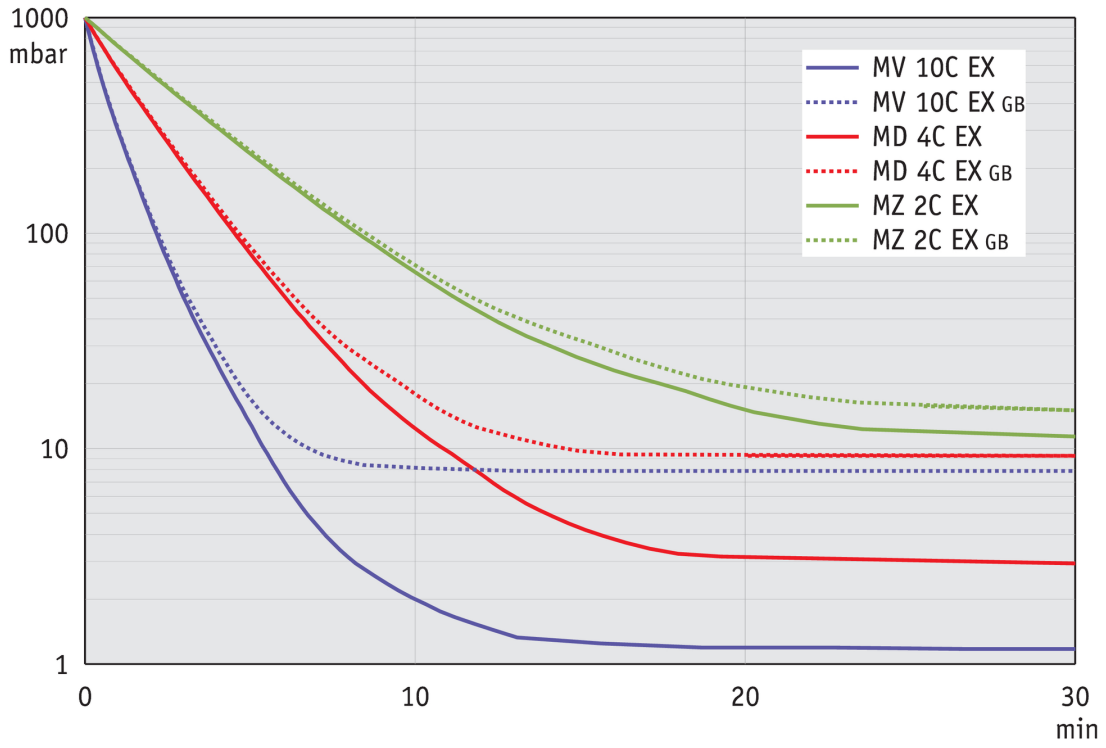

© VACUUBRAND GMBH + CO KG | 2026

尺寸规格表



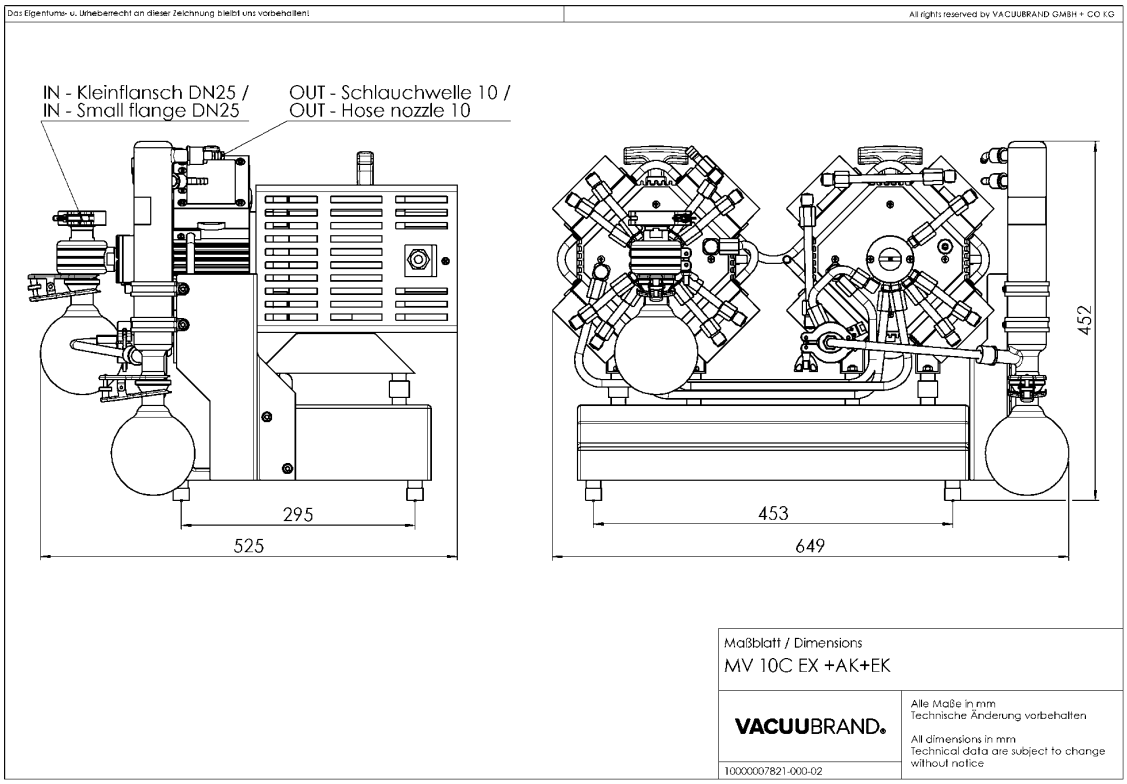

© VACUUBRAND GMBH + CO KG | 2026

网站链接:
https://shop.vacuubrand.com/22614250

VACUUBRAND GMBH + CO KG
P.O. Box 1664
97877 Wertheim
T +49 9342 808 5550
F +49 9342 808 5555

info@vacuubrand.com
www.vacuubrand.com

VACUUBRAND

VACUUBRAND is part of the Brand group, a manufacturer of high-quality and innovative laboratory equipment and vacuum technology with a global team of approx. 1,000 employees.

With highly motivated and qualified employees, we manufacture the world's most comprehensive product family for vacuum generation, measurement and control for the rough and fine vacuum range in the laboratory.

All with one goal:
Enabling our customers to run reliable, safe and efficient processes. This is why we commit ourselves to continuous innovation, first-class performance, and outstanding quality.

Engineering excellence is central to our ability to deliver products and solutions renowned for their quality, durability, and reliability. Innovative technology, high quality materials and extensive testing deliver unmatched performance - engineered and manufactured in Germany.

Together with you, our experts will find the best solution for your application and provide you with first-class service along the way.

© VACUUBRAND GMBH + CO KG

BRAND (Shanghai) Trading Co., Ltd.
Shanghai, China

T +86 21 6422 2318
info@brand.com.cn
china.brand.com.cn

BRAND Scientific Equipment Pvt. Ltd.
Mumbai, India

T +91 22 42957790
customersupport@brand.co.in
www.brand.co.in

BRANDTECH® Scientific, Inc.
Essex, CT. United States of America

T +1 860 767 2562
info@brandtech.com
www.brandtech.com

BRANDGROUP®