VACUUBRAND®

化学真空系统
MZ 2C NT +AK+M+D



网站链接

产品说明

该化学真空系统在化学、生物和制药等实验室应用广泛，主要用于不需要在出气口收集溶剂蒸汽冷凝液的气体或蒸汽的排气、抽取或蒸发过程。手动流量控制阀可以调节真空接口的有效抽速，指针式的真空压力计可显示真空值。该系统非常适用于抽滤系统。进气口的分离瓶（AK）为玻璃材质，外覆保护膜，防止颗粒和液滴进入泵内。

性能特点

- 卓越的化学耐腐蚀性和蒸汽耐受性
- 在较高真空度下仍具有非常好的性能
- 使用气镇仍能达到很好的极限真空
- 排气安静，振动极低
- 手动真空控制，指针式真空显示

© VACUUBRAND GMBH + CO KG | 2026

订购信息

产品名称	额定电源电压|工作频率	电源插头类型	订货号
MZ 2C NT +AK+M+D	230 V | 50-60 Hz	CEE	20732700
MZ 2C NT +AK+M+D	100-115 V | 50-60 Hz 120 V | 60 Hz	US	20732703

货品配置

真空系统安装完毕，连接即可使用，附带说明书

配件

- DN 8-10mm (20636588)
- VACUU·LAN® **模块** DN 10/8 mm (20637873)
- **透明真空管** DN 8 mm (20686061)
- **密封圈套装** MZ 2C NT / MZ 2C NT VARIO / PC 3002 (20696869)
- **密封圈套装** MZ 2C NT / MZ 2C NT VARIO / PC 3002 (20696869)

© VACUUBRAND GMBH + CO KG | 2026

技术指标

50 Hz **最大抽速** (m^3/h)	2 m^3/h
60 Hz **最大抽速** (cfm)	1.4 cfm
极限真空	7 mbar / 5 torr
极限真空，使用气镇	12 mbar / 9 torr
泵头数	2
泵级数	2
真空控制器	Manometer
的允许环境温度范围（运行）	10 - 40 °C
的允许环境温度范围（存放）	-10 - 60 °C
最大出气口压力 (绝对压力)	1.1 bar
进气口连接	**软管喷嘴接头** DN 8-10 mm
出气口连接	**软管喷嘴接头** DN 8-10 mm
额定电机功率	0.18 kW
额定转速 50/60 Hz	1500/1800 min^{-1}
防护等级	IP 40
尺寸（长x宽x高）	310 mm x 243 mm x 313 mm
重量	13.4 kg
噪音水平 50 Hz/1500 Upm/62% (VARIO)/1500 Upm (VARIO-SP)/12500 Upm (VACUU·PURE®)	45 dBA
ATEX**规格**	II 3/- G Ex h IIC T3 Gc X Internal Atm. only
NRTL **标准**	**是**

© VACUUBRAND GMBH + CO KG | 2026

50 Hz下的抽速曲线

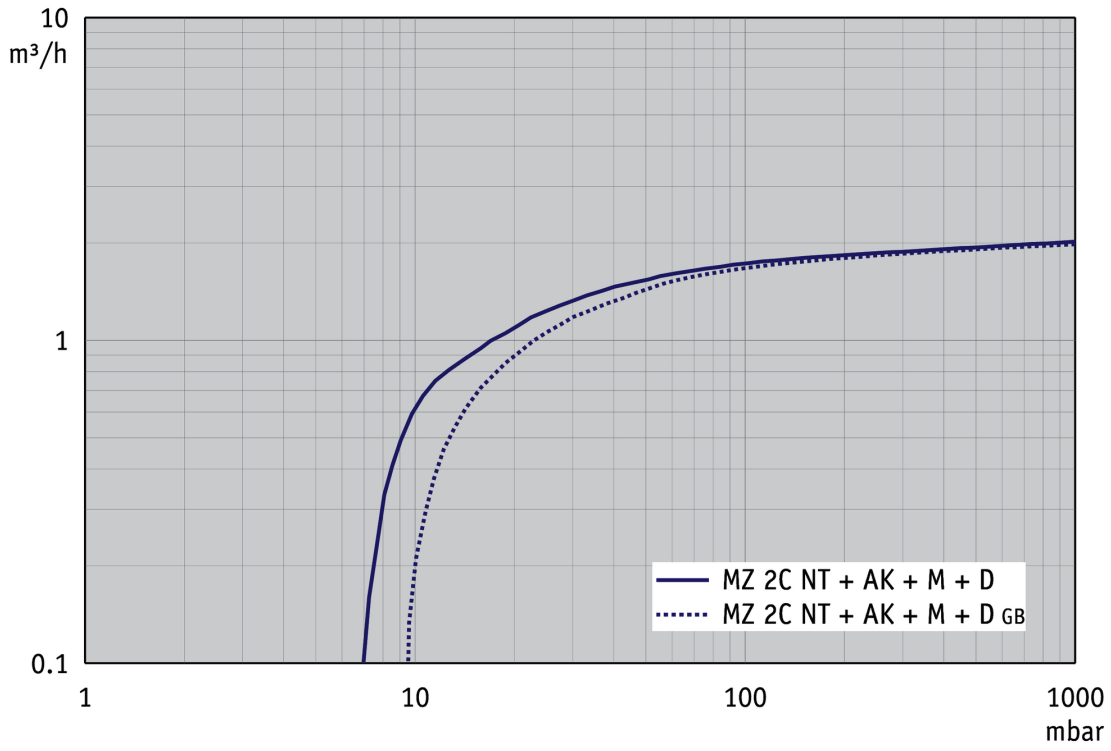

50 Hz下的抽气曲线 （10升容积）

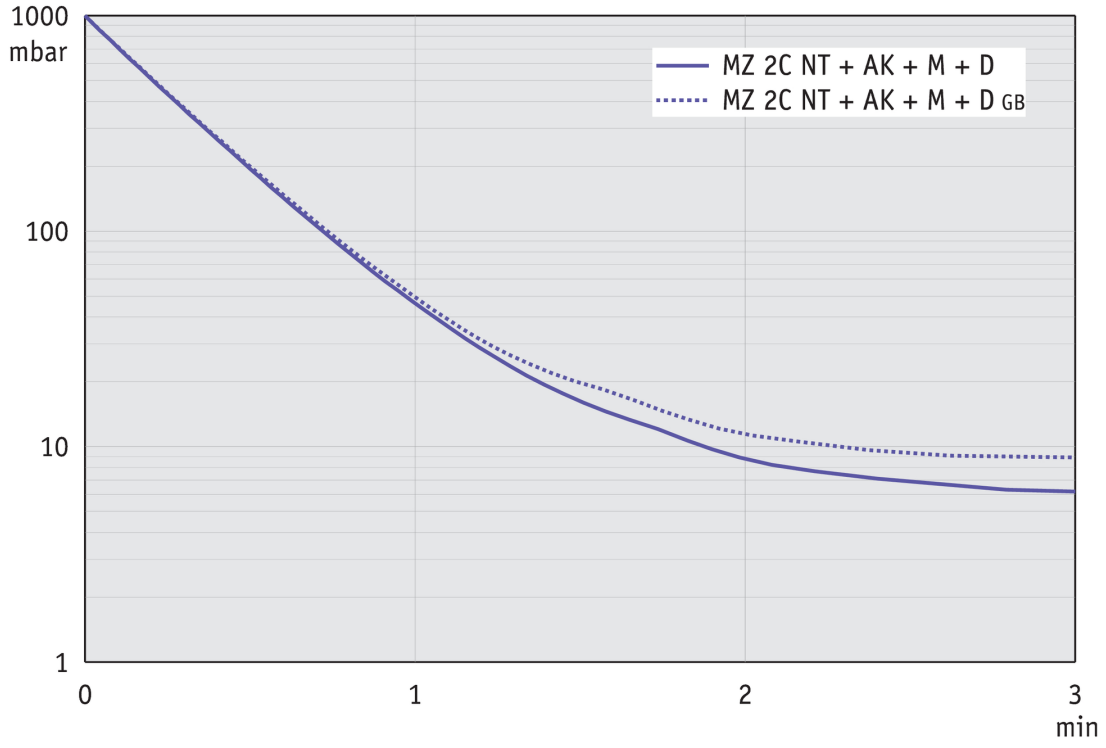

© VACUUBRAND GMBH + CO KG | 2026

60 Hz下的抽速曲线

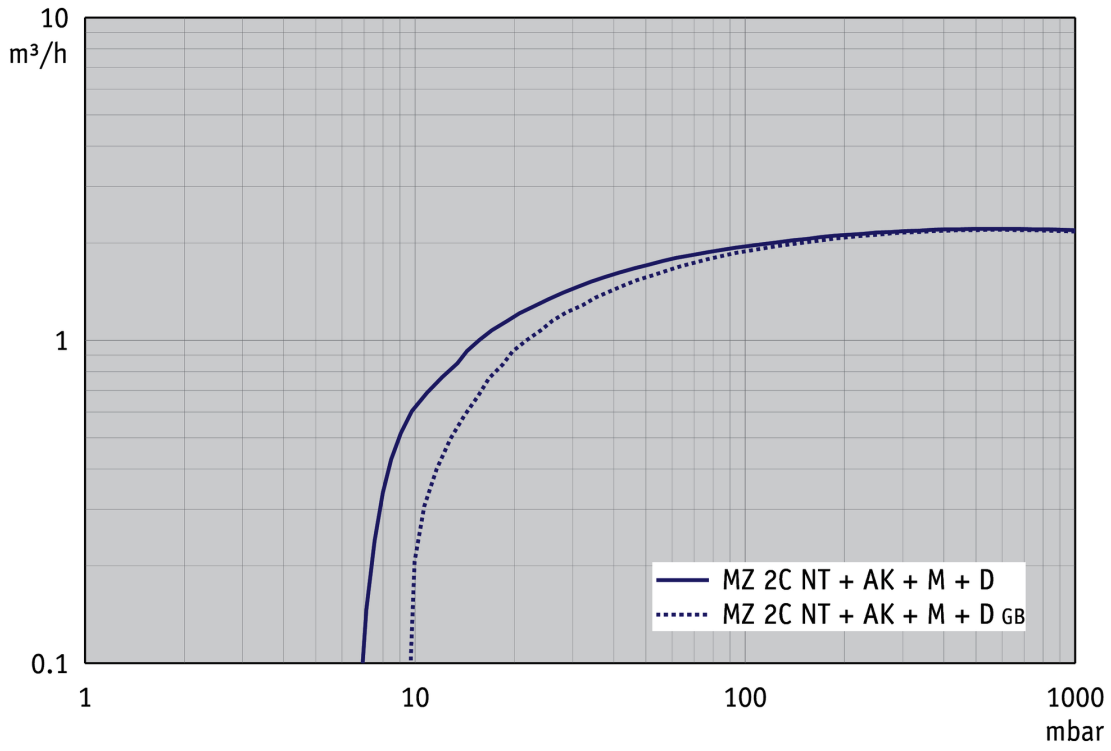

60 Hz下的抽气曲线 （10升容积）

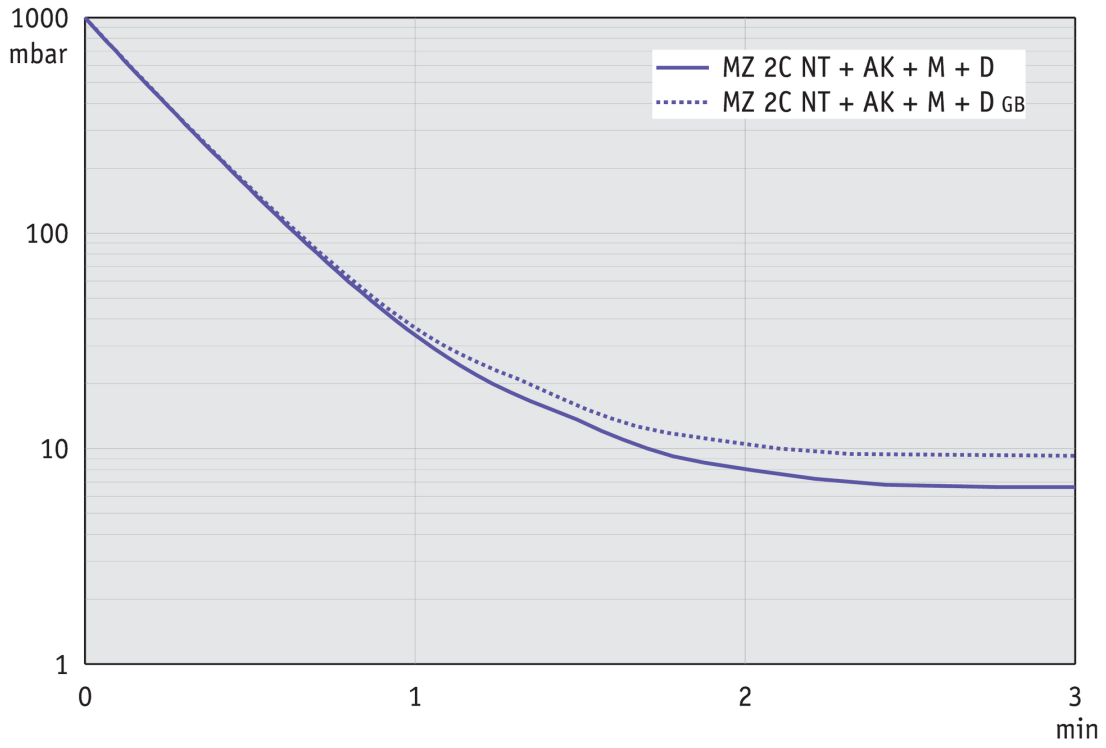

© VACUUBRAND GMBH + CO KG | 2026

尺寸规格表



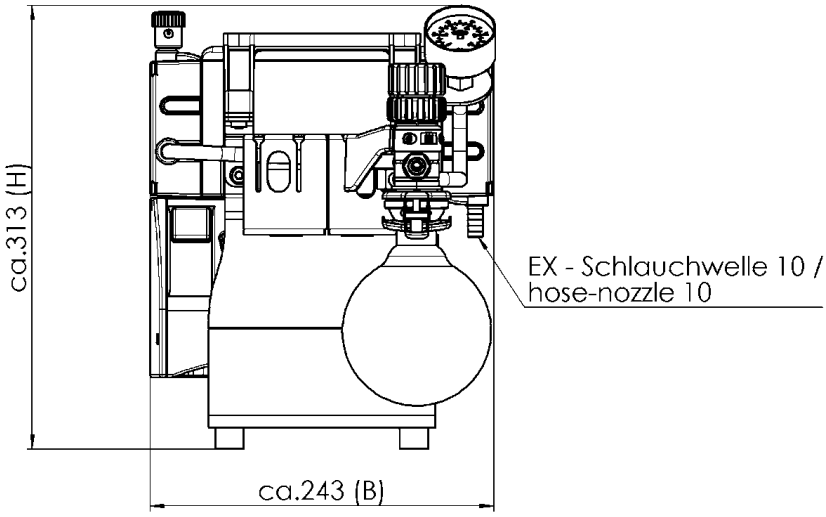

Alle Maße / all dimensions (mm)
Gewicht / weight: 13,4 kg

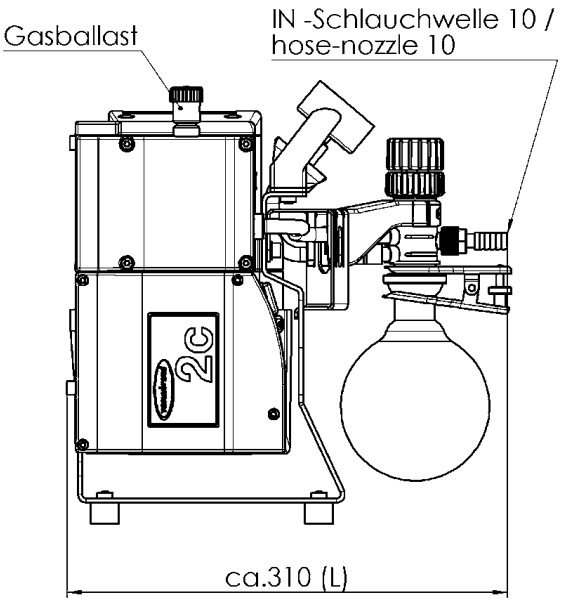

VACUUBRAND MZ 2C NT AK+M+D
Version 2016/05/11

© VACUUBRAND GMBH + CO KG | 2026

VACUUBRAND GMBH + CO KG
P.O. Box 1664
97877 Wertheim
T +49 9342 808 5550
F +49 9342 808 5555

info@vacuubrand.com
www.vacuubrand.com

VACUUBRAND

VACUUBRAND is part of the Brand group, a manufacturer of high-quality and innovative laboratory equipment and vacuum technology with a global team of approx. 1,000 employees.

With highly motivated and qualified employees, we manufacture the world's most comprehensive product family for vacuum generation, measurement and control for the rough and fine vacuum range in the laboratory.

All with one goal:
Enabling our customers to run reliable, safe and efficient processes. This is why we commit ourselves to continuous innovation, first-class performance, and outstanding quality.

Engineering excellence is central to our ability to deliver products and solutions renowned for their quality, durability, and reliability. Innovative technology, high quality materials and extensive testing deliver unmatched performance - engineered and manufactured in Germany.

Together with you, our experts will find the best solution for your application and provide you with first-class service along the way.

© VACUUBRAND GMBH + CO KG

BRAND (Shanghai) Trading Co., Ltd.
Shanghai, China

T +86 21 6422 2318
info@brand.com.cn
china.brand.com.cn

BRAND Scientific Equipment Pvt. Ltd.
Mumbai, India

T +91 22 42957790
customersupport@brand.co.in
www.brand.co.in

BRANDTECH® Scientific, Inc.
Essex, CT. United States of America

T +1 860 767 2562
info@brandtech.com
www.brandtech.com

BRANDGROUP®